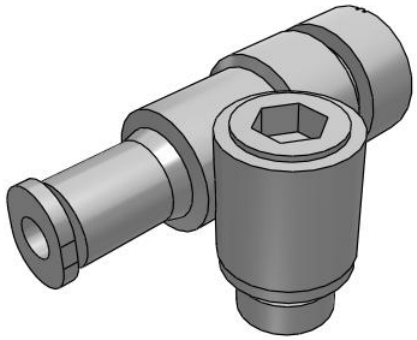

Compact, Elbow - JAS
JAS-LEA04-G01

Datasheet

General series information

- Port Size: M3, M5, 10-32 UNF, 1/8
- Applicable Tubing O.D.: Ø 3.2 to Ø 6 mm and Ø 1/8" to Ø 1/4"
- Operating Pressure Range: 0.05 to 0.7 MPa.

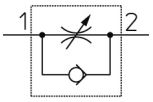

Flow control valve, adjustable, with reverse free flow

Standard specifications

Control Method	E (Meter-out, Gray)
Stud Position	A (Right Side)
Applicable tubing O.D.	04 (ø4)
Port Size	G01 (G 1/8)
Seal method	w/o Sealant
Pressure medium	Air
Maximum operating pressure	0.7 MPa
Minimum operating pressure	0.05 MPa
Proof pressure	1.05 MPa
Maximum ambient temperature	60 °C
Minimum ambient temperature	- 5 °C
Usable tubing material	Nylon, Soft Nylon, Polyurethane, FEP, PFA
Weight	0.014 Kg

Specifications are subject to change without prior notice and any obligation on the part of the manufacturer.

SMC CORPORATION Zuazobidea 14, 01012, Vitoria-Gasteiz, Álava +34 945184100 +34 945184126 www.smc.eu emcmarketing@smc.smces.es

Dimensions

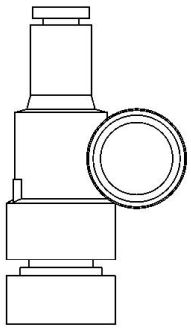

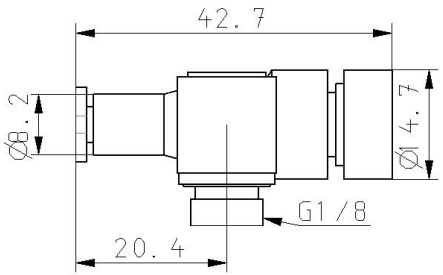

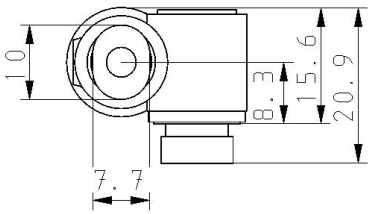

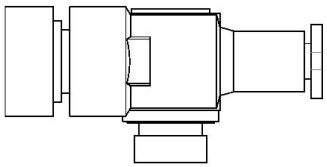

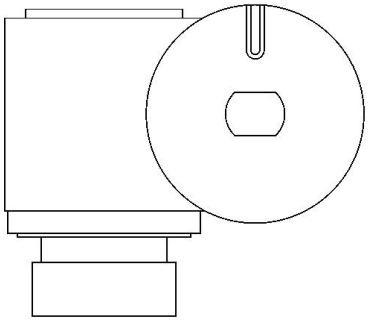

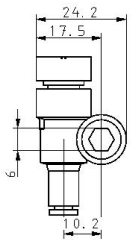

Specifications are subject to change without prior notice and any obligation on the part of the manufacturer.

SMC CORPORATION Zuazobidea 14, 01012, Vitoria-Gasteiz, Álava +34 945184100 +34 945184126 www.smc.eu emcmarketing@smc.smces.es

Constructions

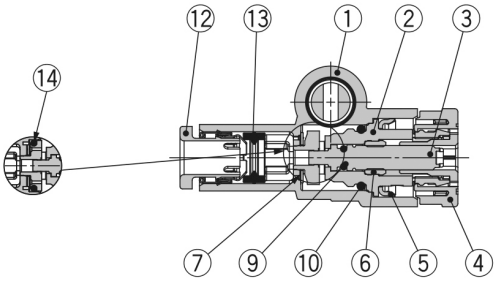

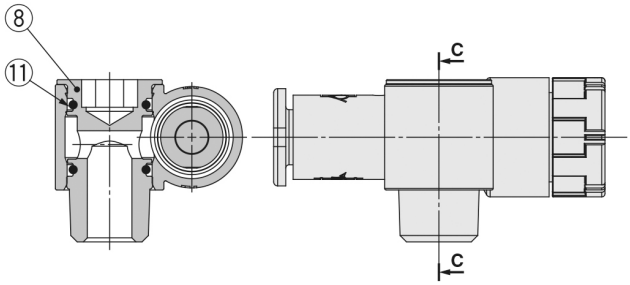

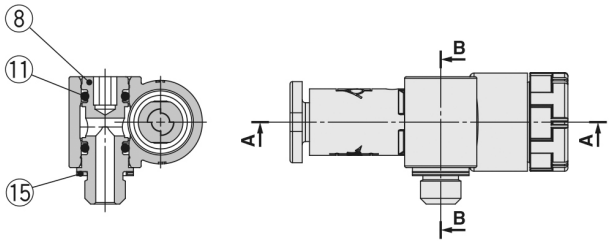

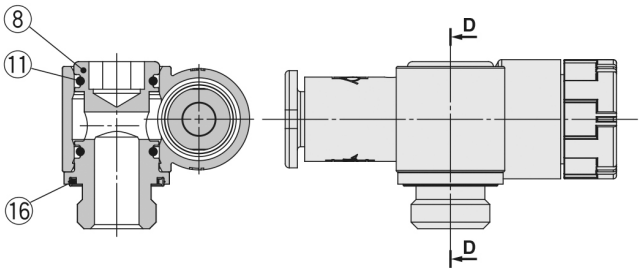

Component Parts

No.	Description	Material	Note
1	**Body A**	PBT	
2	**Body B**	PBT	
3	**Needle**	PBT	
4	**Knob**	POM	
5	**Stopper**	Stainless steel	
6	**Needle guide**	Brass	Electroless nickel plating
7	**Disk seal**	HNBR	
8	**Stud**	Brass	Electroless nickel plating
9	**O-ring**	NBR	
10	**O-ring**	NBR	
11	**O-ring**	NBR	
12	**Cassette**	—	
13	**Seal**	NBR	
14	**O-ring**	NBR	Meter-in only
15	**Gasket**	NBR/Stainless steel	
16	**Seal**	NBR	

Specifications are subject to change without prior notice and any obligation on the part of the manufacturer.

SMC CORPORATION Zuazobidea 14, 01012, Vitoria-Gasteiz, Álava +34 945184100 +34 945184126 www.smc.eu emcmarketing@smc.smces.es

Additional information

Catalogue	JAS-B_EU.pdf
Operation manuals	OM_JAS-L_OMX0006EN-A.pdf

Specifications are subject to change without prior notice and any obligation on the part of the manufacturer.

SMC CORPORATION Zuazobidea 14, 01012, Vitoria-Gasteiz, Álava +34 945184100 +34 945184126 www.smc.eu emcmarketing@smc.smces.es