IZT43, Nozzle Type Ionizer, Separate Controller and Power Supply Module

IZT43-D36HL-JJFU

Datasheet

General series information

- Separate controller nozzle-type ionizer
- IO-Link compatible
- Compact: Height 32 mm x Width 16 mm
- IZTC41 controller can control a maximum of 4 ionizers
- Monitor and operate nozzles which are installed in an inaccessible location
- Multiple alarms & functions
- Static elimination with no air supply.

Standard specifications

Emitter Cartridge Type	D (High Speed Static Neutralization Cartridge)
High-voltage Cable Length	3 (3m)
One-touch fitting	6H (ø6 Straight)
Input/Output	L (IO-Link)
Power Supply Cable Length	J (Entry Direction: Straight, Length: 3 m)
Communication Cable Entry Direction/Length	J (Entry Direction: Straight, Length: 3 m)
Nozzle Bracket	F (Angle Adjustment Bracket)
DIN Rail Mounting Bracket	U (Controller: Included; Supply Module: Included)
Pressure medium	Air (Clean, dry air)
Maximum operating pressure	0.7 MPa
Maximum ambient temperature	40 ºC
Minimum ambient temperature	0 ºC
General power supply	24 VDC ±10 %
Conform to the European RoHS Directive	Conform
Approvals	CE, UKCA
Current consumption	0.4 A or less
Material	Cover: ABS, Aluminium. Switch: Silicone rubber
Ion generation method	Corona discharge
Method of applying voltage	AC, DC
Applied voltage	±6000 V
Ambient humidity	35 to 65% RH (No condensation)
Offset voltage	±30 V or less
Effective static neutralization distance	50 to 2000 mm

Specifications are subject to change without prior notice and any obligation on the part of the manufacturer.

SMC CORPORATION Zuazobidea 14, 01012, Vitoria-Gasteiz, Álava +34 945184100 +34 945184126 www.smc.eu support.marketingeurope@smc.com

Technical graph 1	165701_graph1A_en.jpg
Graph1 title	Installation distance and discharge time
Weight	2.092 Kg

Technical information graphs

Installation distance and discharge time

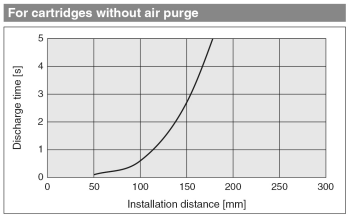

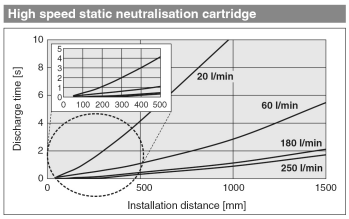

Specifications are subject to change without prior notice and any obligation on the part of the manufacturer.

SMC CORPORATION Zuazobidea 14, 01012, Vitoria-Gasteiz, Álava +34 945184100 +34 945184126 www.smc.eu support.marketingeurope@smc.com

Constructions

IZT43(-L) series

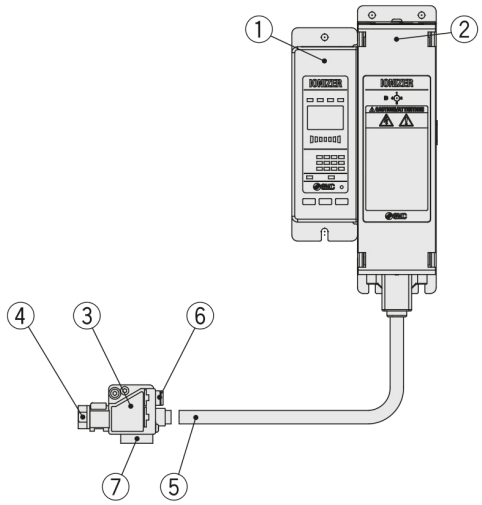

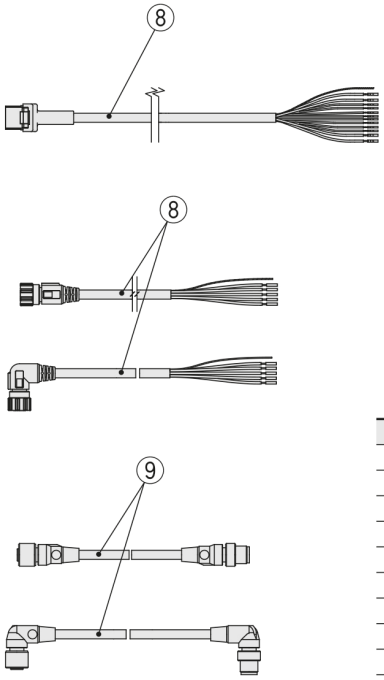

No.	Description
1	Controller
2	High voltage power supply module
3	Nozzle
4	Emitter cartridge
5	High voltage cable
6	One-touch fitting
7	Bracket
8	Power supply cable
9	Communication cable

Specifications are subject to change without prior notice and any obligation on the part of the manufacturer.

SMC CORPORATION Zuazobidea 14, 01012, Vitoria-Gasteiz, Álava +34 945184100 +34 945184126 www.smc.eu support.marketingeurope@smc.com

Additional information

Catalogue	IZT40-41-42-43-D_EU.pdf
Declaration of conformity	newDoC_IZT_TF122006EN.pdf newDoC_IZx_TFV0004EN.pdf
Installation manuals	IM_IZTx_TF2Z267EN.pdf
Operation manuals	OM_IZT-L_OMZ0045EN-A.pdf OM_IZT41-42-L_OMT0049EN-E.pdf

Specifications are subject to change without prior notice and any obligation on the part of the manufacturer.

SMC CORPORATION Zuazobidea 14, 01012, Vitoria-Gasteiz, Álava +34 945184100 +34 945184126 www.smc.eu support.marketingeurope@smc.com