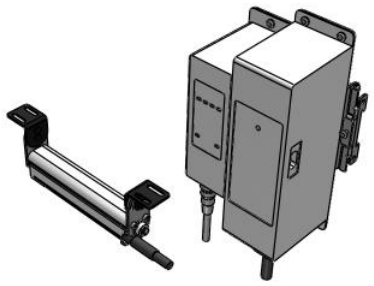

# IZT40/41/42, Bar Type Ionizer, Separate Controller and Power Supply Module

IZT41-16E36HRL-JJBU

Datasheet

## General series information

- IZT40: Basic type / IZT41: AC type / IZT42: Dual AC type
- IZT41/IZT42: Compatible with IO-Link
- Potential amplitude: As low as 25 V or less
- Rapid neutralisation of static electricity: As fast as 0.1 s
- Compact: Height 37 mm x Width 30 mm
- One controller can control a maximum of 4 ionizers
- Monitor and operate bars which are installed in an inaccessible location
- Multiple alarms & functions.

## Standard specifications

| | |
|---|---|
| Model | 41 (AC) |
| Bar Length | 16 (160 mm) |
| Emitter Cartridge, Material | E (High Speed De-ionizing Cartridge, Silicon) |
| High-voltage Cable Length | 3 (3m) |
| One-touch fitting | 6H (ø6 Straight) |
| Plug Position | R (Opposite Side of High-voltage Cable) |
| Input/Output Specifications | L (IO-Link) |
| Power Supply Cable Length | J (Entry Direction: Straight, Length: 3 m) |
| Communication Cable Entry Direction/Length | J (Entry Direction: Straight, Length: 3 m) |
| Bar Bracket | B (w/Bracket 1) |
| DIN Rail Bracket for Controller and <br>High-voltage Power Supply | U (Controller: Included; High-voltage Power Supply: Included) |
| Option | Standard |
| Maximum operating pressure | 0.5 MPa or less |
| Proof pressure | 0.7 MPa |

Specifications are subject to change without prior notice and any obligation on the part of the manufacturer.



SMC CORPORATION Zuazobidea 14, 01012, Vitoria-Gasteiz, Álava +34 945184100 +34 945184126 www.smc.eu support.marketingeurope@smc.com

| | |
|---|---|
| Maximum ambient temperature | 40 °C |
| Minimum ambient temperature | 0 °C |
| Approvals | CE |
| Power supply | 24 VDC ±10% |
| Current consumption | 0.8 A or less |
| Material | Cover: ABS, Emitter cartridge: PBT, Emitter: Tungsten or Single crystal silicon, High-voltage cable: Silicone rubber, PVC |
| Applicable fluid | Air (Clean dry air) |
| Ion generation method | Corona discharge type |
| Method of applying voltage | AC, DC |
| Applied voltage | ±7000 V |
| Ambient humidity | 35 to 80%RH (No condensation) |
| Offset voltage | Within ±30 V |
| Effective static neutralization distance | 50 to 2000 mm |

Specifications are subject to change without prior notice and any obligation on the part of the manufacturer.



SMC CORPORATION Zuazobidea 14, 01012, Vitoria-Gasteiz, Álava +34 945184100 +34 945184126 www.smc.eu support.marketingeurope@smc.com

# Dimensions

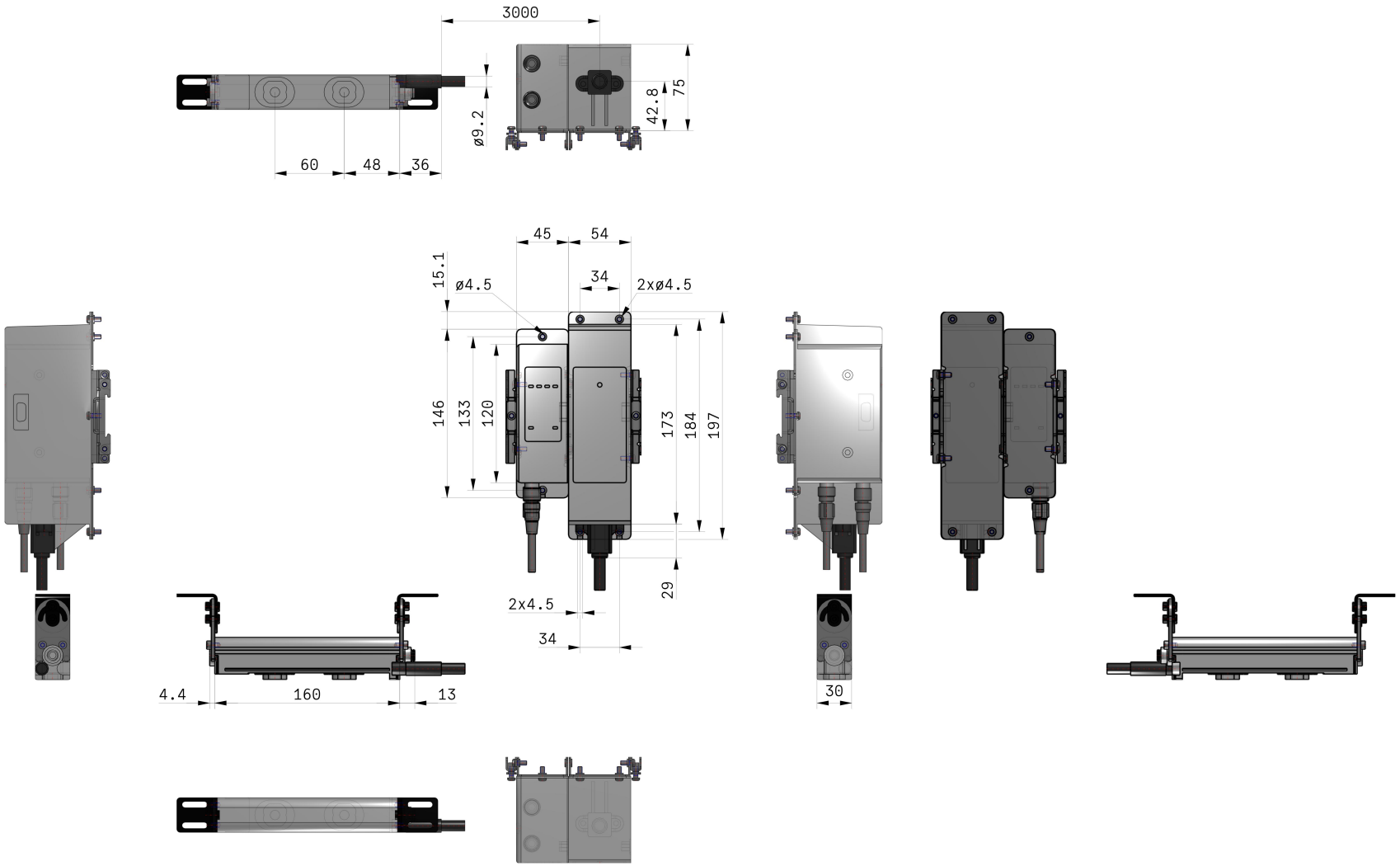


Specifications are subject to change without prior notice and any obligation on the part of the manufacturer.



SMC CORPORATION Zuazobidea 14, 01012, Vitoria-Gasteiz, Álava +34 945184100 +34 945184126 www.smc.eu support.marketingeurope@smc.com

## Constructions

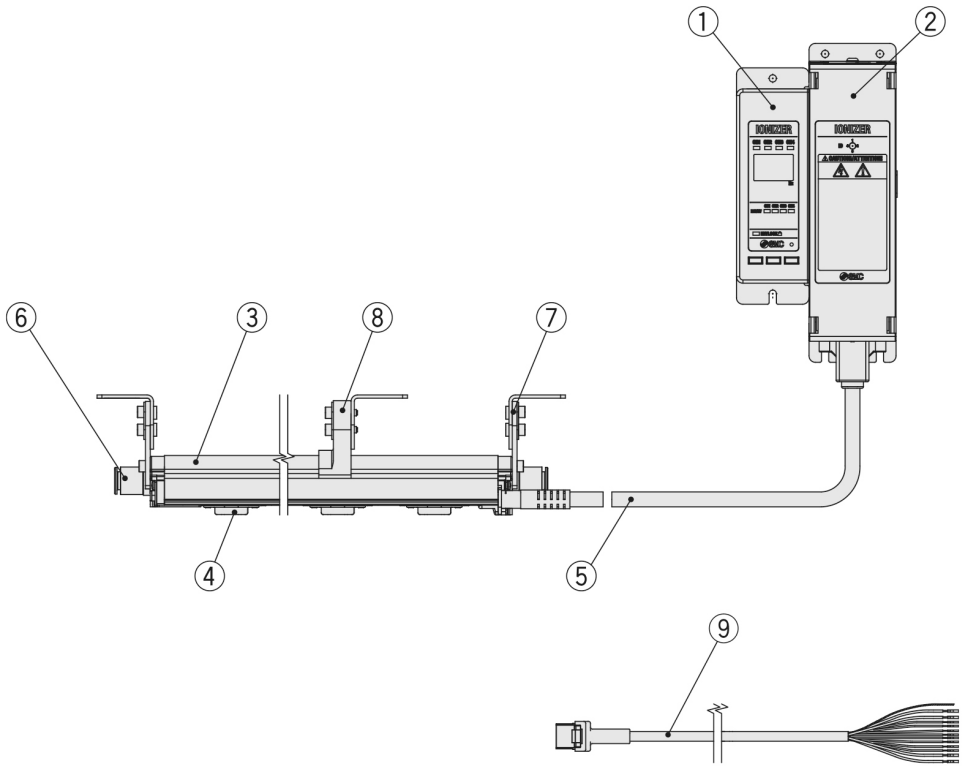


| No. | Description |
|---|---|
| 1 | Controller |
| 2 | High voltage power supply module |
| 3 | Bar |
| 4 | Emitter cartridge |
| 5 | High voltage cable |
| 6 | One-touch fitting |
| 7 | End bracket |
| 8 | Intermediate bracket |
| 9 | Power supply cable |

Specifications are subject to change without prior notice and any obligation on the part of the manufacturer.



SMC CORPORATION Zuazobidea 14, 01012, Vitoria-Gasteiz, Álava +34 945184100 +34 945184126 www.smc.eu support.marketingeurope@smc.com

# Additional information

| | |
|---|---|
| Catalogue | IZT40-41-42-43-D_EU.pdf |
| Declaration of conformity | newDoC_IZT_TF122006EN.pdf<br>newDoC_IZx_TFV0004EN.pdf |
| Installation manuals | IM_IZTx_TF2Z267EN.pdf |
| Operation manuals | OM_IZT-L_OMZ0045EN-A.pdf<br>OM_IZT41-42-L_OMT0049EN-E.pdf |

Specifications are subject to change without prior notice and any obligation on the part of the manufacturer.



SMC CORPORATION Zuazobidea 14, 01012, Vitoria-Gasteiz, Álava +34 945184100 +34 945184126 www.smc.eu support.marketingeurope@smc.com