IZT40/41/42, Bar Type Ionizer, Separate Controller and Power Supply Module

IZT40-232D3AH-3BU

Datasheet

General series information

- IZT40: Basic type / IZT41: AC type / IZT42: Dual AC type
- IZT41/IZT42: Compatible with IO-Link
- Potential amplitude: As low as 25 V or less
- Rapid neutralisation of static electricity: As fast as 0.1 s
- Compact: Height 37 mm x Width 30 mm
- One controller can control a maximum of 4 ionizers
- Monitor and operate bars which are installed in an inaccessible location
- Multiple alarms & functions.

Standard specifications

Model	40 (Standard)
Bar Length	232 (2320mm)
Emmiter Cartridge, Material	D (High Speed De-ionizing Cartridge, Tungsten)
High-voltage Cable Length	3 (3m)
One-touch fitting	AH (ø10 Straight)
Plug Position	w/o Plug
Input, Output Specification	None (40); NPN (41, 42)
Power Supply Cable Length	3 (3m)
Communication Cable Entry Direction/Length	None
Bar Bracket	B (w/Bracket 1)
DIN Rail Bracket for Controller & High-voltage Power Supply	U (Controller: Included; High-voltage Power Supply: Included)
Option	Standard
Maximum operating pressure	0.5 MPa or less
Proof pressure	0.7 MPa

Specifications are subject to change without prior notice and any obligation on the part of the manufacturer.

SMC CORPORATION Zuazobidea 14, 01012, Vitoria-Gasteiz, Álava +34 945184100 +34 945184126 www.smc.eu emcmarketing@smc.smces.es

Maximum ambient temperature	40 °C
Minimum ambient temperature	0 °C
Approvals	CE
Power supply	24 VDC ±10%
Current consumption	0.7 A or less
Material	Cover: ABS, Emitter cartridge: PBT, Emitter: Tungsten or Single crystal silicon, High-voltage cable: Silicone rubber, PVC
Applicable fluid	Air (Clean dry air)
Ion generation method	Corona discharge type
Method of applying voltage	AC, DC
Applied voltage	±7000 V
Ambient humidity	35 to 80%RH (No condensation)
Offset voltage	Within ±30 V
Effective static neutralization distance	50 to 2000 mm

Specifications are subject to change without prior notice and any obligation on the part of the manufacturer.

SMC CORPORATION Zuazobidea 14, 01012, Vitoria-Gasteiz, Álava +34 945184100 +34 945184126 www.smc.eu emcmarketing@smc.smces.es

Dimensions

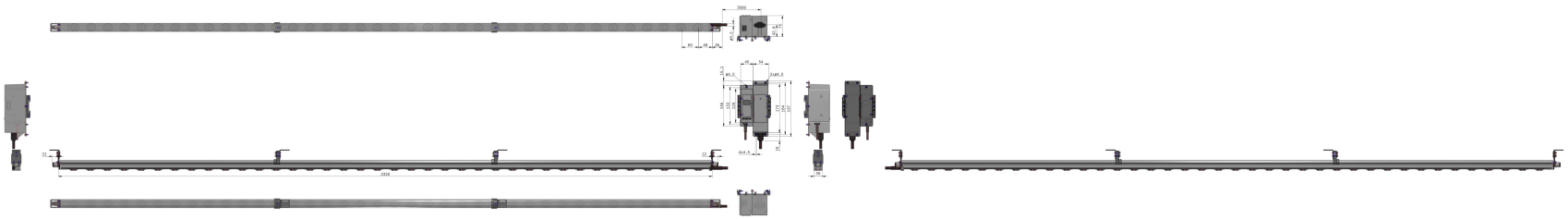

Specifications are subject to change without prior notice and any obligation on the part of the manufacturer.

SMC CORPORATION Zuazobidea 14, 01012, Vitoria-Gasteiz, Álava +34 945184100 +34 945184126 www.smc.eu emcmarketing@smc.smces.es

Constructions

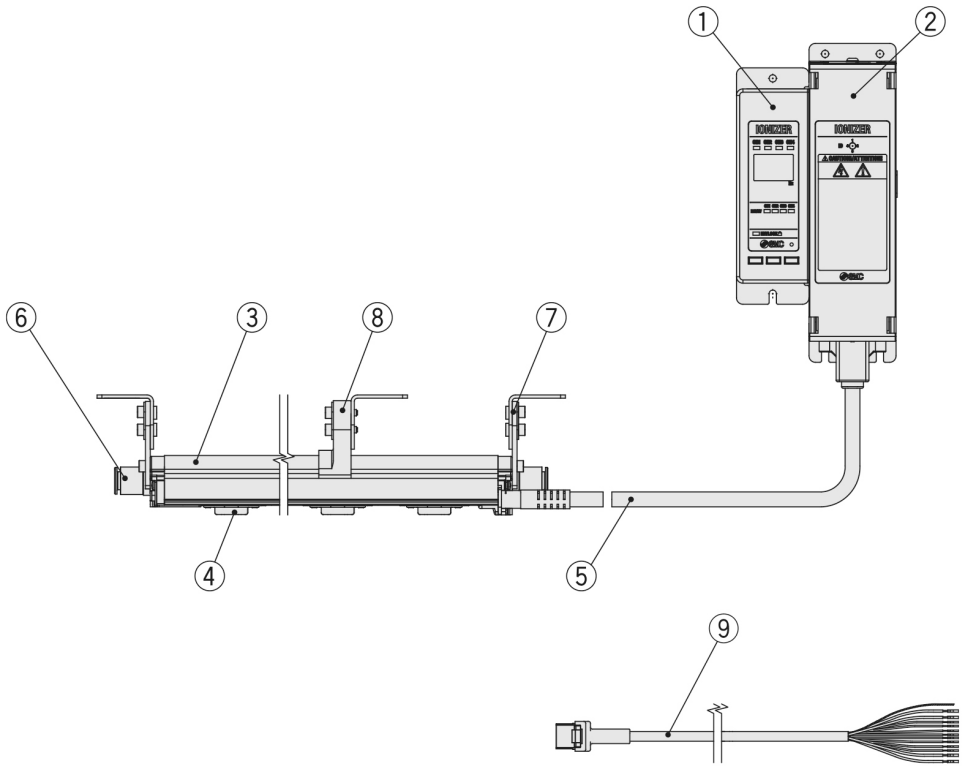

No.	Description
1	Controller
2	High voltage power supply module
3	Bar
4	Emitter cartridge
5	High voltage cable
6	One-touch fitting
7	End bracket
8	Intermediate bracket
9	Power supply cable

Specifications are subject to change without prior notice and any obligation on the part of the manufacturer.

SMC CORPORATION Zuazobidea 14, 01012, Vitoria-Gasteiz, Álava +34 945184100 +34 945184126 www.smc.eu emcmarketing@smc.smces.es

Additional information

Catalogue	IZT40-41-42-43-D_EU.pdf
Declaration of conformity	newDoC_IZT_TF122006EN.pdf newDoC_IZx_TFV0004EN.pdf
Installation manuals	IM_IZTx_TF2Z267EN.pdf
Operation manuals	OM_IZT-L_OMZ0045EN-A.pdf OM_IZT41-42-L_OMT0049EN-E.pdf

Specifications are subject to change without prior notice and any obligation on the part of the manufacturer.

SMC CORPORATION Zuazobidea 14, 01012, Vitoria-Gasteiz, Álava +34 945184100 +34 945184126 www.smc.eu emcmarketing@smc.smces.es