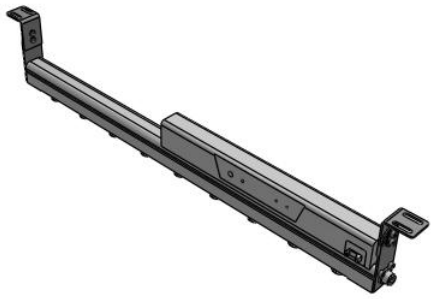

IZS40/41/42
IZS40-580-06B

Datasheet

General series information

- IZS40: Basic type (AC, DC) / IZS41: High speed (AC, Sensing AC, DC) / IZS42: Dual AC type.
- Controller integrated in the bar.
- Autobalance sensor, feedback sensor.
- Wireless remote control.
- Transition wiring for ionizers serial connection.
- Display and warning alarms.

Standard specifications

Electrode Needle Material	High speed de-ionizing cartridge (Tungsten)
Bracket	B (With bracket)
Type	40 (Standard type)
Output	NPN (or none for type 40)
Option	None
One-touch fitting	06
Power Supply Cable	3m
Bar Length	580mm
Sensor	Type 40: N/A; Type 41 & 42: Built-in Auto Balance Sensor
Maximum operating pressure	0.5 MPa or less
Proof pressure	0.7 MPa
Maximum ambient temperature	40 °C
Minimum ambient temperature	0 °C
Approvals	CE
Power supply	24 VDC ±10%
Current consumption	330 mA or less

Specifications are subject to change without prior notice and any obligation on the part of the manufacturer.

SMC United Kingdom +34 945184126 sales@smc.uk

Material	Body cover: ABS, Emitter cartridge: PBT, Emitter: Tungsten, Single crystal silicon
Applicable fluid	Air (Clean dry air)
Ion generation method	Corona discharge type
Method of applying voltage	AC, DC
Applied voltage	±7000 V
Ambient humidity	35 to 80% RH (No condensation)
Offset voltage	Within ±30 V
Effective static neutralization distance	50 to 2000 mm
Weight	0.914 Kg

Specifications are subject to change without prior notice and any obligation on the part of the manufacturer.

SMC United Kingdom +34 945184126 sales@smc.uk

Dimensions

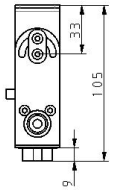

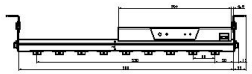

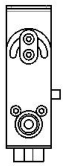

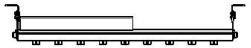

Specifications are subject to change without prior notice and any obligation on the part of the manufacturer.

SMC United Kingdom +34 945184126 sales@smc.uk

Constructions

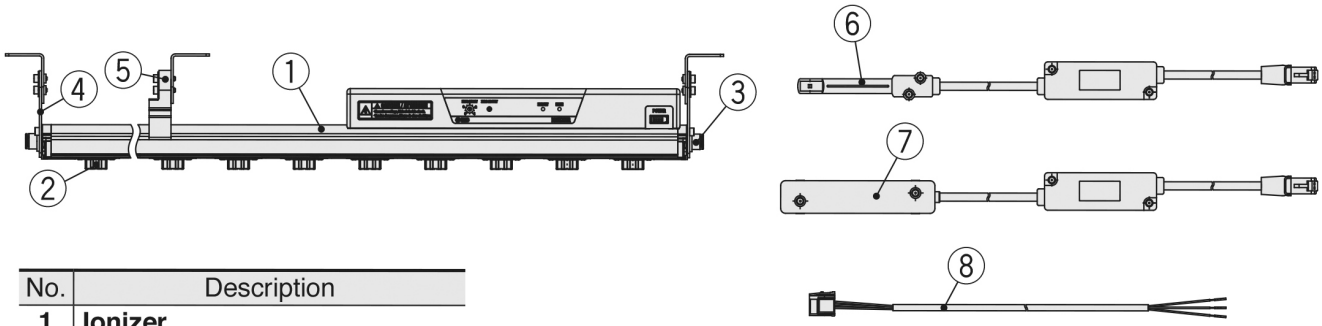

No.	Description
1	**Ionizer**
2	**Emitter cartridge**
3	**One-touch fitting**
4	**End bracket**
5	**Intermediate bracket**
6	**Feedback sensor**
7	**Auto balance sensor [High accuracy type]**
8	**Power supply cable (for IZS40)**

Specifications are subject to change without prior notice and any obligation on the part of the manufacturer.

SMC United Kingdom +34 945184126 sales@smc.uk

Additional information

Catalogue	IZS40_41_42-C_EU.pdf
Declaration of conformity	newDoC_IZS4_TF1V243EN.pdf DoC_IZS4x_TDQ0038.pdf newDoC_IZS_TF122010EN.pdf
Installation manuals	IM_IZS4_TF2Z271EN.pdf
Operation manuals	OM_IZS4_OMP0064EN-F.pdf

Specifications are subject to change without prior notice and any obligation on the part of the manufacturer.

SMC United Kingdom +34 945184126 sales@smc.uk