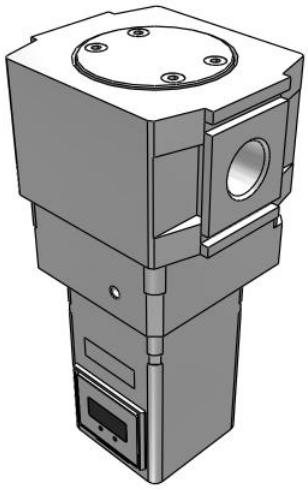

Standby Electro-Pneumatic Regulator – ITV2050/3050-X399

ITV3050-IL40-1-K-X399

Datasheet

General series information

- Remote pressure setting and switching during equipment startup/shutdown
- Select from normally closed or normally open
- With backflow function
- With soft start-up function.

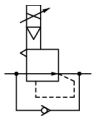

Standby electro-pneumatic regulator

Standard specifications

Size	3050 (AMS40A/60A)
Body Size	40 (For AMS40A)
Type of Actuation	1 (Normally Closed)
Pressure Display unit	K (Units Selection Function)
Pressure medium	Air
Maximum temperature of pressure medium	50 °C (no condensation)
Minimum temperature of pressure medium	0 °C
Maximum ambient temperature	50 °C (no condensation)
Minimum ambient temperature	0 °C
General power supply	24 VDC ±10 %
Conform to the European RoHS Directive	Conform
Approvals	CE, UKCA
Current consumption	0.12 A
Protocol	IO-Link
Enclosure	IP65
Sensitivity	Max. 0.2 % F.S.
Repeatability	Max. ±0.5 % F.S.
Set pressure range	0.005 - 0.7 MPa
Linearity	Max. ±1% F.S.

Specifications are subject to change without prior notice and any obligation on the part of the manufacturer.

SMC CORPORATION Zuazobidea 14, 01012, Vitoria-Gasteiz, Álava +34 945184100 +34 945184126 www.smc.eu support.marketingeurope@smc.com

Max. supply pressure	0.8 MPa
Min. supply pressure	Set pressure ±0.1 MPa
Temperature characteristics	Max. ±0.12 % F.S./°C
Weight	1.320 Kg

Specifications are subject to change without prior notice and any obligation on the part of the manufacturer.

SMC CORPORATION Zuazobidea 14, 01012, Vitoria-Gasteiz, Álava +34 945184100 +34 945184126 www.smc.eu support.marketingeurope@smc.com

Dimensions

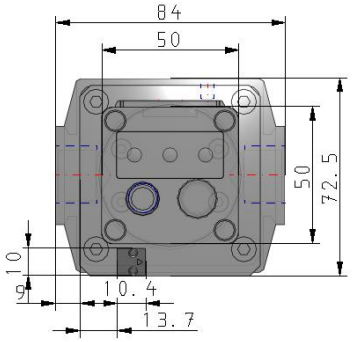

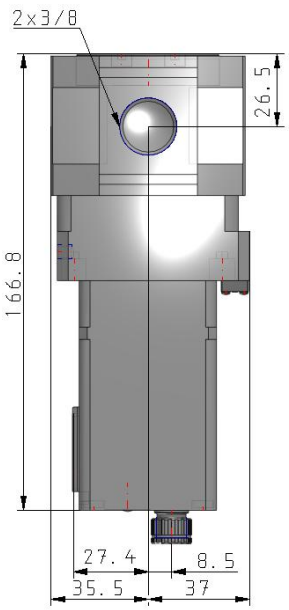

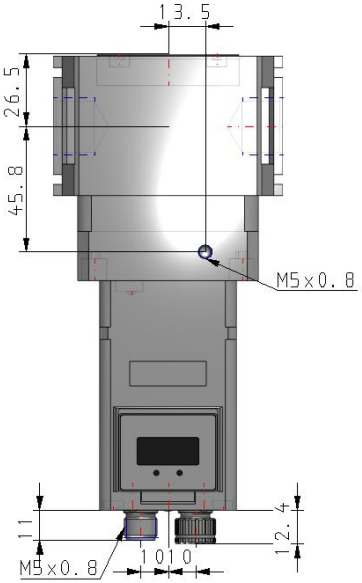

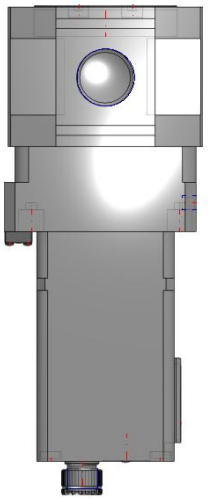

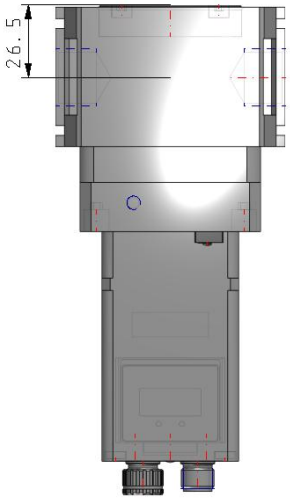

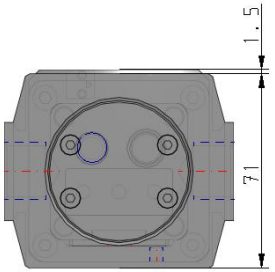

Specifications are subject to change without prior notice and any obligation on the part of the manufacturer.

SMC CORPORATION Zuazobidea 14, 01012, Vitoria-Gasteiz, Álava +34 945184100 +34 945184126 www.smc.eu support.marketingeurope@smc.com

Additional information

Catalogue	AMS-Da_EU.pdf
Operation manuals	OM_ITV-IL-X309_DIY-60K00_OM002EN-D.pdf

Specifications are subject to change without prior notice and any obligation on the part of the manufacturer.

SMC CORPORATION Zuazobidea 14, 01012, Vitoria-Gasteiz, Álava +34 945184100 +34 945184126 www.smc.eu support.marketingeurope@smc.com