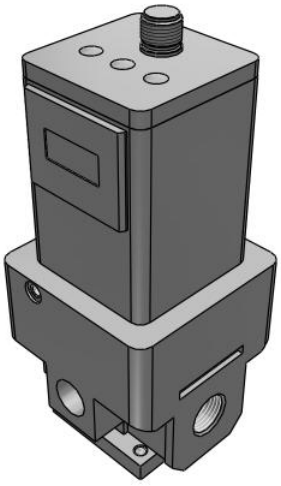

ITV1000/2000/3000, Electro-Pneumatic Regulator

ITV3030-ILF3N

Datasheet

General series information

- Pressure range: 0.005 to 0.9 MPa
- Maximum flow rate: 4000 l/min (ANR)
- Port sizes: 1/8, 1/4, 3/8, 1/2
- Applicable fieldbus protocols: IO-Link, CC-Link, DeviceNet™, PROFIBUS, RS-232C.

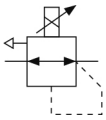

Electro-pneumatic regulator

Standard specifications

Model	30 (4000 L/min)
Pressure Range	3 (0.005~0.5 MPa)
Power Voltage	0 (24VDC)
Input Signal	IL (I/O-Link)
Monitor Output	None
Thread	F (G[PF])
Port Size	3 (3/8 [2000,3000])
Accessory	None
Cable Connector	N (w/oCable Connector)
Pressure Display Unit	MPa
Options	None
Maximum temperature of pressure medium	50 °C
Minimum temperature of pressure medium	0 °C
Maximum operating pressure	1.0 MPa
Maximum ambient temperature	50 °C
Minimum ambient temperature	0 °C
Approvals	CE
Protection class with connector	IP65
Current consumption	0.12 A

Specifications are subject to change without prior notice and any obligation on the part of the manufacturer.

SMC CORPORATION Zuazobidea 14, 01012, Vitoria-Gasteiz, Álava +34 945184100 +34 945184126 www.smc.eu emcmarketing@smc.smces.es

Enclosure	IP65
Sensitivity	0.2% (F.S.)
Repeatability	±0.5% (F.S.)
Set pressure range	0.005 - 0.5 MPa
Linearity	±1% (F.S.)
Power supply voltage	24 VDC ±10%
Min. supply pressure	Set pressure +0.1 MPa
Accuracy	±2%F.S. ±1 digit
Temperature characteristics	±0.12% (F.S.)/C
Minimum display unit	0.001
Hysteresis	0.5% (F.S.)
Input impedance current type	250 Ω
Input impedance Voltage type	6.5 kΩ
Weight	0.720 Kg

Specifications are subject to change without prior notice and any obligation on the part of the manufacturer.

SMC CORPORATION Zuazobidea 14, 01012, Vitoria-Gasteiz, Álava +34 945184100 +34 945184126 www.smc.eu emcmarketing@smc.smces.es

Dimensions

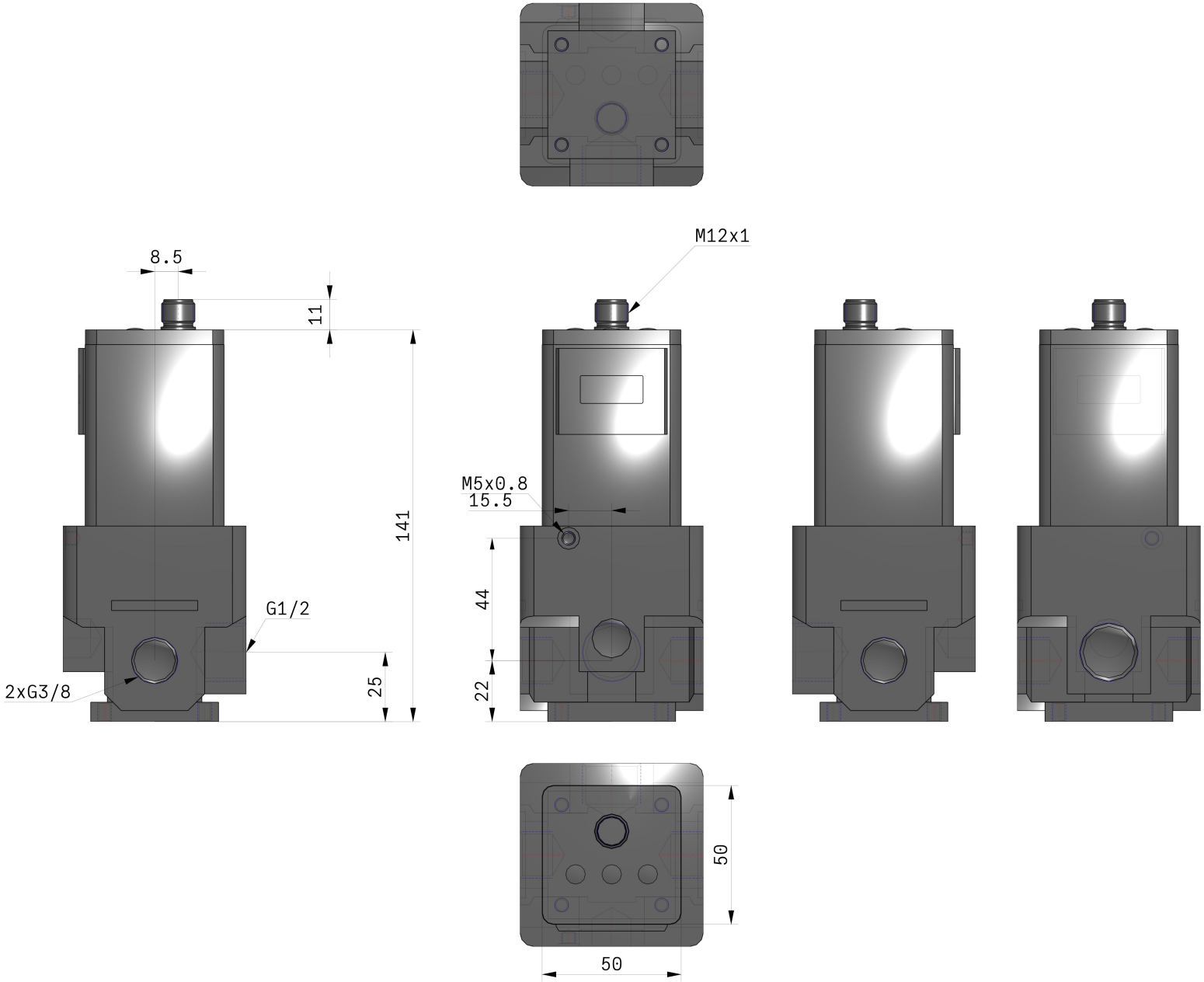

Specifications are subject to change without prior notice and any obligation on the part of the manufacturer.

SMC CORPORATION Zuazobidea 14, 01012, Vitoria-Gasteiz, Álava +34 945184100 +34 945184126 www.smc.eu emcmarketing@smc.smces.es

Constructions

ITV3000

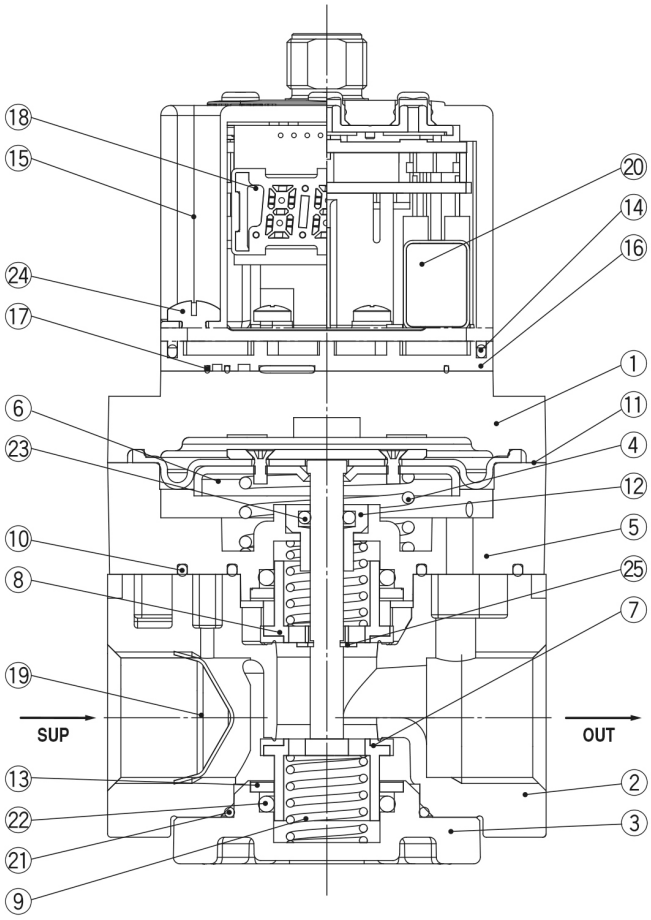

Main Component Parts

	No.	Description	Material
	1	Cover	Aluminum alloy
◆	2	Body	Aluminum alloy
◆	3	Valve guide	Aluminum alloy
◆	4	Bias spring	Stainless steel
◆	5	Intermediate body	Aluminum alloy
◆	6	Diaphragm assembly	NBR
			Rolled sheet steel
			Stainless steel
			Aluminum alloy
			Steel
◆	7	Valve (Supply valve)	HNBR/Brass
◆	8	Valve (Exhaust valve)	HNBR/Brass
◆	9	Valve spring	Stainless steel
◆	10	Seal	NBR
	11	Seal	NBR
◆	12	Rod guide	Brass
◆	13	O-ring retainer	Aluminum alloy
	14	Seal	NBR
	15	Bowl assembly	Resin
			Silicone rubber
	16	Sub-plate	Resin
	17	Seal	NBR
	18	Control circuit assembly	—
◆	19	Filter	Stainless steel
	20	Solenoid valve	—
	21	O-ring	NBR
◆	22	O-ring	NBR
◆	23	O-ring	NBR
	24	Round head Phillips screw	Steel
◆	25	Retaining ring	Stainless steel

∗ Parts in contact with fluid are indicated with a mark ◆.

Specifications are subject to change without prior notice and any obligation on the part of the manufacturer.

SMC CORPORATION Zuazobidea 14, 01012, Vitoria-Gasteiz, Álava +34 945184100 +34 945184126 www.smc.eu emcmarketing@smc.smces.es

Additional information

Catalogue	ITV-G_EU.pdf
Declaration of conformity	newDoC_ITVx000-G_EN.pdf newDoC_ITVx000-H_EN.pdf newDoC_ITVx000_IO-Link-EN.pdf DoC_ITVx_TF00023-B.pdf
Installation manuals	IM_ITVx000_EN-A.pdf IM_ITVx000-IO-Link_EN.pdf
Operation manuals	OM_ITVx000-60_EN-D.pdf OM_ITVx000-CC-Link_EN-D.pdf OM_ITVx000-PROFIBUS-DP_EN-A.pdf OM_ITVx000-IO-Link_EN-A.pdf OM_ITVx000-52_53_EN-E.pdf OM_ITVx000-DeviceNet_EN-E.pdf OM_ITVx000-RS-232C_EN-A.pdf OM_ITVx000_DOC1070538EN-1.pdf

Specifications are subject to change without prior notice and any obligation on the part of the manufacturer.

SMC CORPORATION Zuazobidea 14, 01012, Vitoria-Gasteiz, Álava +34 945184100 +34 945184126 www.smc.eu emcmarketing@smc.smces.es