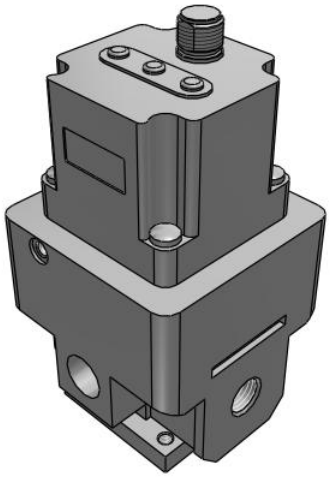

ITV1000/2000/3000, Electro-Pneumatic Regulator
ITV3030-03F2N

Datasheet

General series information

- Pressure range: 0.005 to 0.9 MPa
- Maximum flow rate: 4000 l/min (ANR)
- Port sizes: 1/8, 1/4, 3/8, 1/2
- Applicable fieldbus protocols: IO-Link, CC-Link, DeviceNet™, PROFIBUS, RS-232C.

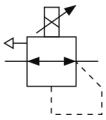

Electro-pneumatic regulator

Standard specifications

Model	30 (4000 L/min)
Pressure Range	3 (0.005 to 0.5 MPa)
Power Voltage	0 (24 VDC)
Input Signal	0 (Current Style 4 to 20 mA DC)
Monitor Output	3 (Switch Output PNP)
Thread	F (G[PF])
Port Size	2 (1/4 [2000,3000])
Accessory	None
Cable Connector Type	N (Without Cable Connector)
Pressure Display Unit	MPa
Options	None
Maximum temperature of pressure medium	50 °C
Minimum temperature of pressure medium	0 °C
Maximum operating pressure	1.0 MPa
Maximum ambient temperature	50 °C
Minimum ambient temperature	0 °C
Approvals	CE
Protection class with connector	IP65
Current consumption	0.12 A

Specifications are subject to change without prior notice and any obligation on the part of the manufacturer.

SMC CORPORATION Zuazobidea 14, 01012, Vitoria-Gasteiz, Álava +34 945184100 +34 945184126 www.smc.eu support.marketingeurope@smc.com

Enclosure	IP65
Sensitivity	0.2% (F.S.)
Repeatability	±0.5% (F.S.)
Set pressure range	0.005 - 0.5 MPa
Linearity	±1% (F.S.)
Power supply voltage	24 VDC ±10%
Min. supply pressure	Set pressure +0.1 MPa
Accuracy	±2%F.S. ±1 digit
Temperature characteristics	±0.12% (F.S.)/C
Minimum display unit	0.001
Hysteresis	0.5% (F.S.)
Input signal Current type	4 - 20 mA DC
Input impedance current type	250 Ω
Input impedance Voltage type	6.5 kΩ
Output signal Switch	PNP open collector output: Max. 80 mA
Weight	0.645 Kg

Specifications are subject to change without prior notice and any obligation on the part of the manufacturer.

SMC CORPORATION Zuazobidea 14, 01012, Vitoria-Gasteiz, Álava +34 945184100 +34 945184126 www.smc.eu support.marketingeurope@smc.com

Dimensions

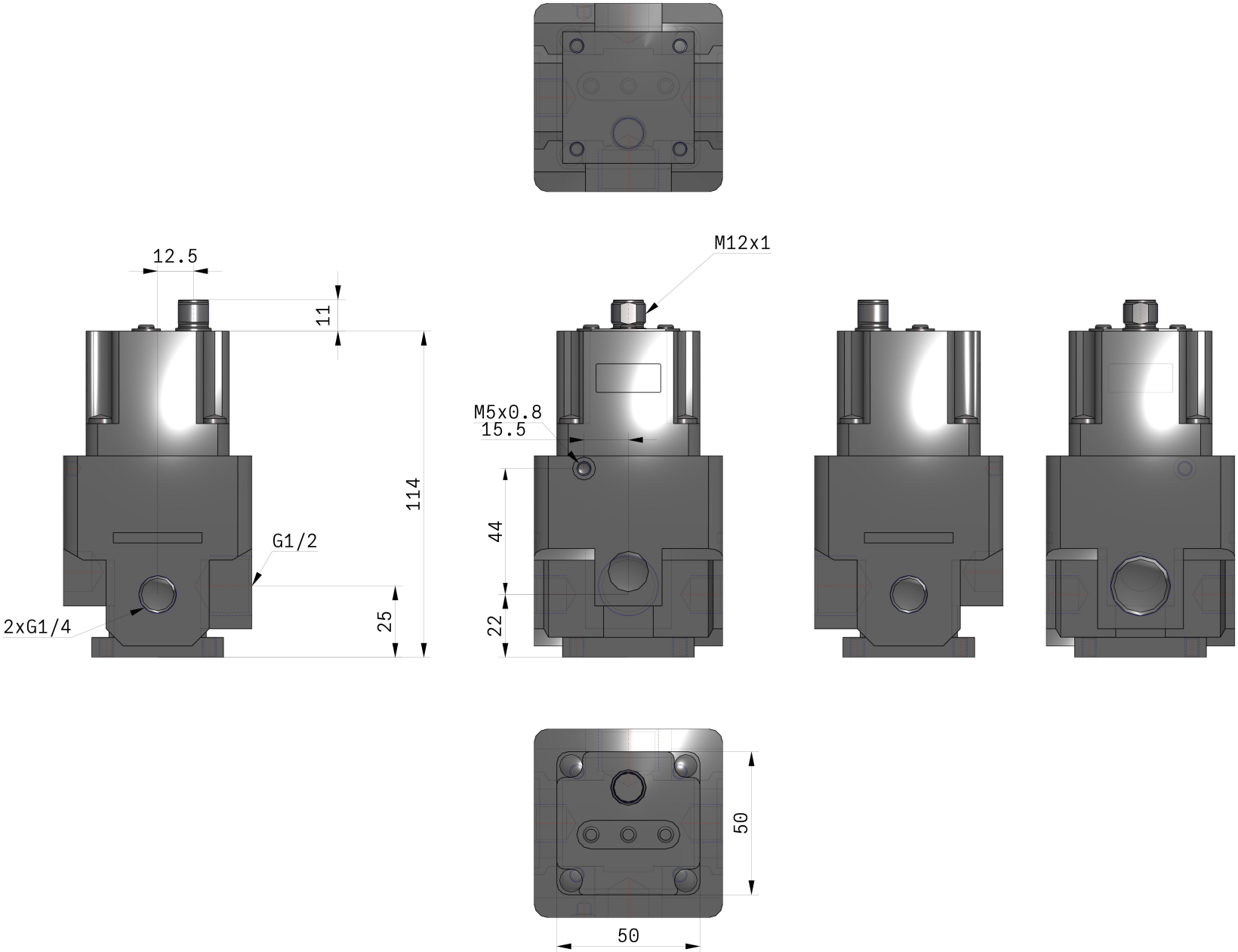

Specifications are subject to change without prior notice and any obligation on the part of the manufacturer.

SMC CORPORATION Zuazobidea 14, 01012, Vitoria-Gasteiz, Álava +34 945184100 +34 945184126 www.smc.eu support.marketingeurope@smc.com

Constructions

ITV3000

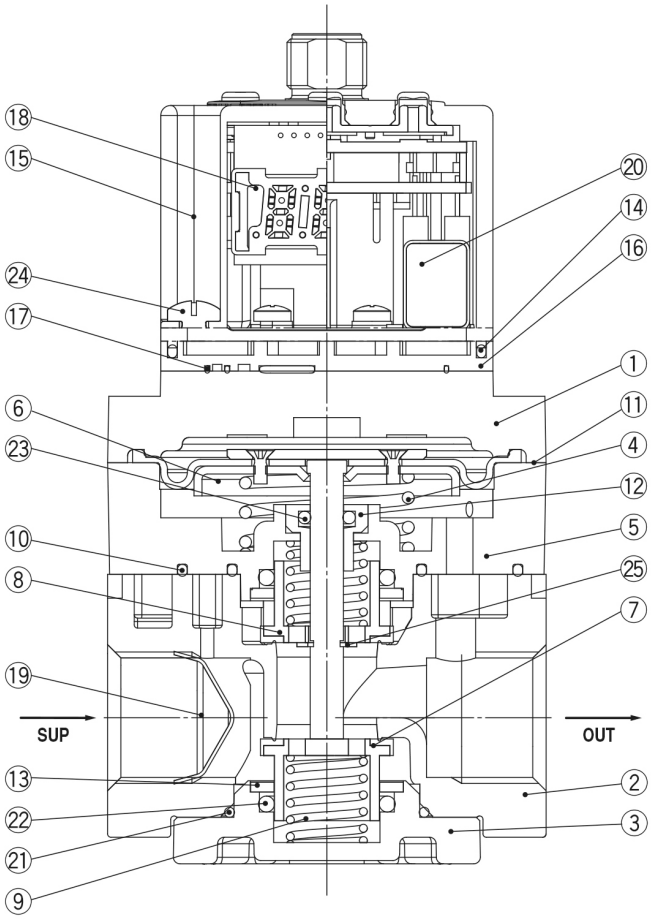

Main Component Parts

	No.	Description	Material
	1	Cover	Aluminum alloy
◆	2	Body	Aluminum alloy
◆	3	Valve guide	Aluminum alloy
◆	4	Bias spring	Stainless steel
◆	5	Intermediate body	Aluminum alloy
◆	6	Diaphragm assembly	NBR
			Rolled sheet steel
			Stainless steel
			Aluminum alloy
			Steel
◆	7	Valve (Supply valve)	HNBR/Brass
◆	8	Valve (Exhaust valve)	HNBR/Brass
◆	9	Valve spring	Stainless steel
◆	10	Seal	NBR
	11	Seal	NBR
◆	12	Rod guide	Brass
◆	13	O-ring retainer	Aluminum alloy
	14	Seal	NBR
	15	Bowl assembly	Resin
			Silicone rubber
	16	Sub-plate	Resin
	17	Seal	NBR
	18	Control circuit assembly	—
◆	19	Filter	Stainless steel
	20	Solenoid valve	—
	21	O-ring	NBR
◆	22	O-ring	NBR
◆	23	O-ring	NBR
	24	Round head Phillips screw	Steel
◆	25	Retaining ring	Stainless steel

∗ Parts in contact with fluid are indicated with a mark ◆.

Specifications are subject to change without prior notice and any obligation on the part of the manufacturer.

SMC CORPORATION Zuazobidea 14, 01012, Vitoria-Gasteiz, Álava +34 945184100 +34 945184126 www.smc.eu support.marketingeurope@smc.com

Additional information

Catalogue	ITV-G_EU.pdf
Declaration of conformity	newDoC_ITVx000-G_EN.pdf newDoC_ITVx000-H_EN.pdf newDoC_ITVx000_IO-Link-EN.pdf DoC_ITVx_TF00023-B.pdf
Installation manuals	IM_ITVx000_EN-A.pdf IM_ITVx000-IO-Link_EN-A.pdf
Operation manuals	OM_ITVx000-60_EN-D.pdf OM_ITV2_OM00109EN-F.pdf OM_ITV2_00145_EN-B.pdf OM_ITVx000-CC-Link_EN-D.pdf OM_ITVx000-PROFIBUS-DP_EN-A.pdf OM_ITVx000-DeviceNet_EN-E.pdf OM_ITVx000-RS-232C_EN-A.pdf OM_ITVx000_DOC1070538EN-1.pdf

Specifications are subject to change without prior notice and any obligation on the part of the manufacturer.

SMC CORPORATION Zuazobidea 14, 01012, Vitoria-Gasteiz, Álava +34 945184100 +34 945184126 www.smc.eu support.marketingeurope@smc.com