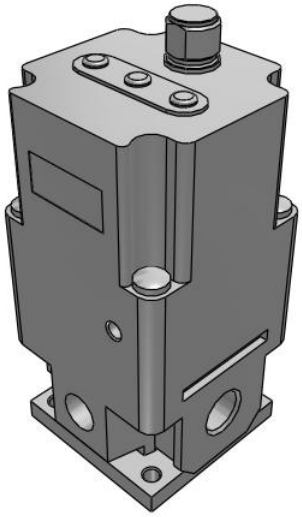

ITV209*, Electronic Vacuum Regulator
ITV2090-04F2N5

Datasheet

General series information

- Pressure range: –1.3 to –80 kPa
- Maximum flow rate: 200 l/min (ANR)
- Port size: 1/4
- Applicable fieldbus protocols: IO-Link, CC-Link, DeviceNet™, PROFIBUS, RS-232C.

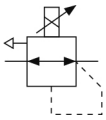

Electro-pneumatic regulator

Standard specifications

Power Voltage	0 (DC24V)
Input Signal	0 (Current Style 4~20mADC)
Monitor Output	4 (Analog Output 4~20mA)
Thread	F (G [PF])
Accessory	None
Cable Connector	N (w/oCable Connector)
Suffix	5 (kPa)
Pressure medium	Compressed air
Maximum temperature of pressure medium	50 °C
Minimum temperature of pressure medium	0 °C [without condensation]
Maximum operating pressure	-101 kPa
Minimum operating pressure	-13.3.kPa
Operating pressure for max. vacuum	-101 kPa
Maximum ambient temperature	50 °C
Minimum ambient temperature	0 °C
Approvals	CE;UL
Protection class with connector	IP65
Number of pneumatic connections	3 pcs.
Pneumatic input connection	G 1/4

Specifications are subject to change without prior notice and any obligation on the part of the manufacturer.

SMC CORPORATION Zuazobidea 14, 01012, Vitoria-Gasteiz, Álava +34 945184100 +34 945184126 www.smc.eu support.marketingeurope@smc.com

Pneumatic output connection	G 1/4
Pneumatic exhaust connection	G 1/4
Initial value of pressure measuring range	-1.3 bis -80 kPa
Type of actuation	Electrically
Current consumption	0.12 A or less
Sensitivity	Within 0.2% (Full span)
Repeatability	Within ±0.5% (Full span)
Set pressure range	–1.3 ~ –80 kPa
Linearity	Within ±1% (Full span)
Power supply voltage	24 VDC ±10%
Max. supply pressure	-101 kPa
Min. supply pressure	Set pressure –13.3 kPa
Display	±2%F.S. ±1 digit
Temperature characteristics	Within ±0.12% (Full span)/C
Display unit	kPa
Hysteresis	Within 0.5% (Full span)
Input signal Current type	4 ~ 20 mA DC
Input impedance current type	250 Ω or less
Output signal Analogue	4 to 20 mA DC (Sink type) (Load impedance: 250Ω or less) Output accuracy within ±6% (Full span)
Weight	0.390 Kg

Specifications are subject to change without prior notice and any obligation on the part of the manufacturer.

SMC CORPORATION Zuazobidea 14, 01012, Vitoria-Gasteiz, Álava +34 945184100 +34 945184126 www.smc.eu support.marketingeurope@smc.com

Dimensions

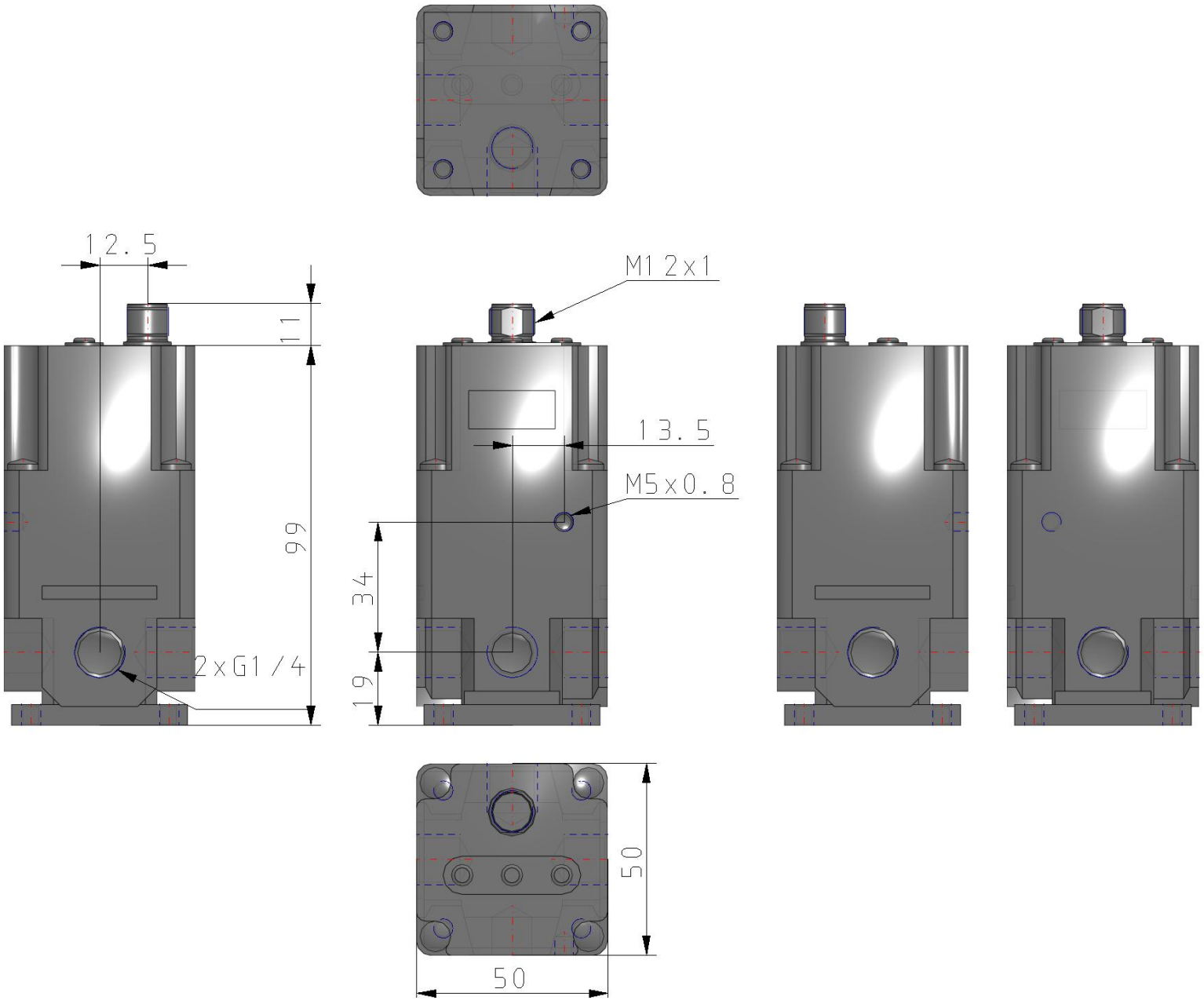

Specifications are subject to change without prior notice and any obligation on the part of the manufacturer.

SMC CORPORATION Zuazobidea 14, 01012, Vitoria-Gasteiz, Álava +34 945184100 +34 945184126 www.smc.eu support.marketingeurope@smc.com

Additional information

Catalogue	ITV-G_EU.pdf
Declaration of conformity	newDoC_ITVx000-G_EN.pdf newDoC_ITVx000-H_EN.pdf newDoC_ITVx000_IO-Link-EN.pdf DoC_ITVx_TF00023-B.pdf
Installation manuals	IM_ITVx000_EN-A.pdf IM_ITVx000-IO-Link_EN-A.pdf
Operation manuals	OM_ITVx000-60_EN-D.pdf OM_ITVx000-CC-Link_EN-D.pdf OM_ITVx000-PROFIBUS-DP_EN-A.pdf OM_ITVx000-IO-Link_EN-A.pdf OM_ITVx000-52_53_EN-E.pdf OM_ITVx000-DeviceNet_EN-E.pdf OM_ITVx000-RS-232C_EN-A.pdf OM_ITVx000_DOC1070538EN-1.pdf

Specifications are subject to change without prior notice and any obligation on the part of the manufacturer.

SMC CORPORATION Zuazobidea 14, 01012, Vitoria-Gasteiz, Álava +34 945184100 +34 945184126 www.smc.eu support.marketingeurope@smc.com