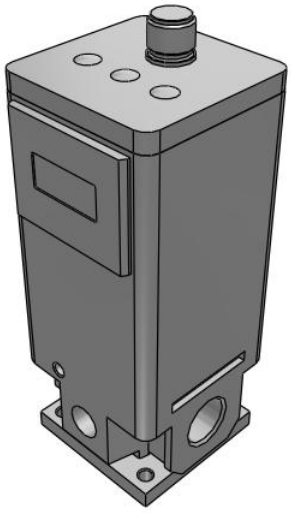

ITV1000/2000/3000, Electro-Pneumatic Regulator
ITV2050-ILF3N

Datasheet

General series information

- Pressure range: 0.005 to 0.9 MPa
- Maximum flow rate: 4000 l/min (ANR)
- Port sizes: 1/8, 1/4, 3/8, 1/2
- Applicable fieldbus protocols: IO-Link, CC-Link, DeviceNet™, PROFIBUS, RS-232C.

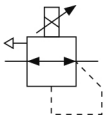

Electro-pneumatic regulator

Standard specifications

Model	20 (1500 L/min)
Pressure Range	5 (0.005~0.9MPa)
Power Voltage	0 (24VDC)
Input Signal	IL (I/O-Link)
Monitor Output	None
Thread	F (G[PF])
Port Size	3 (3/8 [2000,3000])
Accessory	None
Cable Connector	N (w/oCable Connector)
Pressure Display Unit	MPa
Options	None
Maximum temperature of pressure medium	50 °C
Minimum temperature of pressure medium	0 °C
Maximum operating pressure	1.0 MPa
Maximum ambient temperature	50 °C
Minimum ambient temperature	0 °C
Approvals	CE
Protection class with connector	IP65
Current consumption	0.12 A

Specifications are subject to change without prior notice and any obligation on the part of the manufacturer.

SMC CORPORATION Zuazobidea 14, 01012, Vitoria-Gasteiz, Álava +34 945184100 +34 945184126 www.smc.eu support.marketingeurope@smc.com

Enclosure	IP65
Sensitivity	0.2% (F.S.)
Repeatability	±0.5% (F.S.)
Set pressure range	0.005 - 0.9 MPa
Linearity	±1% (F.S.)
Power supply voltage	24 VDC ±10%
Min. supply pressure	Set pressure +0.1 MPa
Accuracy	±2%F.S. ±1 digit
Temperature characteristics	±0.12% (F.S.)/C
Minimum display unit	0.001
Hysteresis	0.5% (F.S.)
Input impedance current type	250 Ω
Input impedance Voltage type	6.5 kΩ
Weight	0.420 Kg

Specifications are subject to change without prior notice and any obligation on the part of the manufacturer.

SMC CORPORATION Zuazobidea 14, 01012, Vitoria-Gasteiz, Álava +34 945184100 +34 945184126 www.smc.eu support.marketingeurope@smc.com

Dimensions

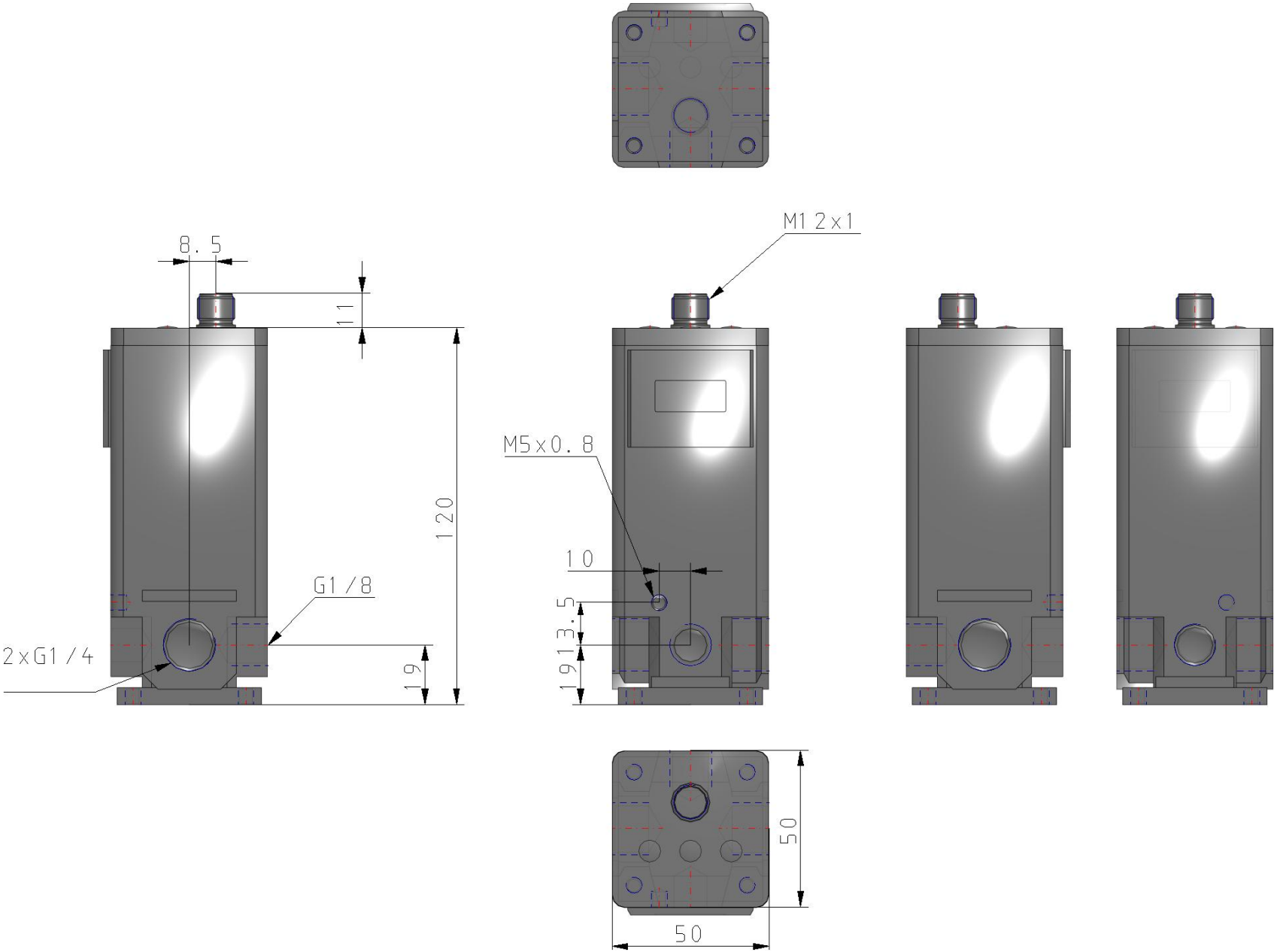

Specifications are subject to change without prior notice and any obligation on the part of the manufacturer.

SMC CORPORATION Zuazobidea 14, 01012, Vitoria-Gasteiz, Álava +34 945184100 +34 945184126 www.smc.eu support.marketingeurope@smc.com

Constructions

ITV2000

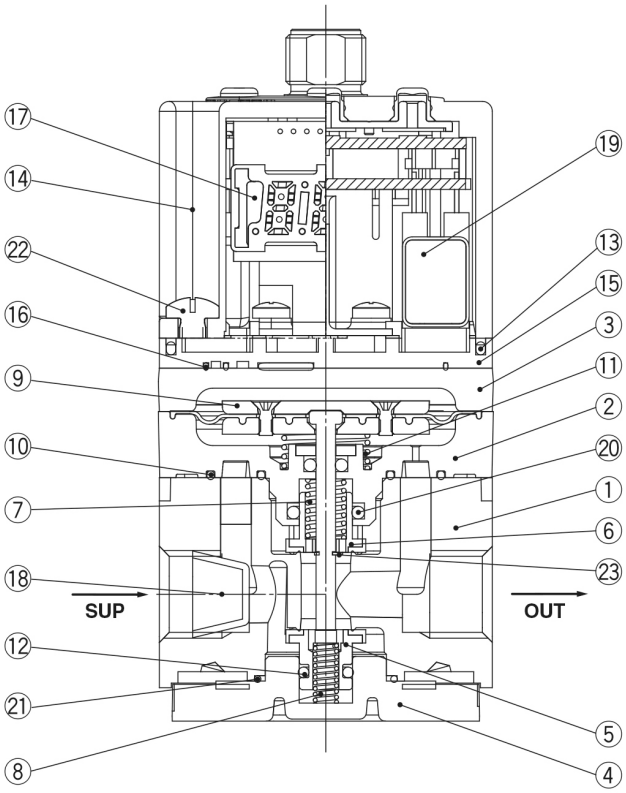

Main Component Parts

	No.	Description	Material
◆	1	Body	Aluminum alloy
◆	2	Intermediate body	Aluminum alloy
	3	Cover	Aluminum alloy
◆	4	Valve guide	Aluminum alloy
◆	5	Valve (Supply valve)	HNBR/Brass
◆	6	Valve (Exhaust valve)	HNBR/Brass
◆	7	Valve spring	Stainless steel
◆	8	Valve spring	Stainless steel
◆	9	Diaphragm assembly	Stainless steel
			Aluminum alloy
			HNBR
			Steel
◆	10	Seal	NBR
◆	11	Bias spring	Stainless steel
◆	12	O-ring	NBR
	13	Seal	NBR
	14	Bowl assembly	Resin
			Silicone rubber
	15	Sub-plate	Resin
	16	Seal	NBR
	17	Control circuit assembly	—
◆	18	Filter	Stainless steel
	19	Solenoid valve	—
◆	20	O-ring	NBR
	21	O-ring	NBR
	22	Round head Phillips screw	Steel
◆	23	Retaining ring	Stainless steel

∗ Parts in contact with fluid are indicated with a mark ◆.

Specifications are subject to change without prior notice and any obligation on the part of the manufacturer.

SMC CORPORATION Zuazobidea 14, 01012, Vitoria-Gasteiz, Álava +34 945184100 +34 945184126 www.smc.eu support.marketingeurope@smc.com

Additional information

Catalogue	ITV-G_EU.pdf
Declaration of conformity	newDoC_ITVx000-G_EN.pdf newDoC_ITVx000-H_EN.pdf newDoC_ITVx000_IO-Link-EN.pdf DoC_ITVx_TF00023-B.pdf
Installation manuals	IM_ITVx000_EN-A.pdf IM_ITVx000-IO-Link_EN-A.pdf
Operation manuals	OM_ITVx000-60_EN-D.pdf OM_ITVx000-CC-Link_EN-D.pdf OM_ITVx000-PROFIBUS-DP_EN-A.pdf OM_ITVx000-IO-Link_EN-A.pdf OM_ITVx000-52_53_EN-E.pdf OM_ITVx000-DeviceNet_EN-E.pdf OM_ITVx000-RS-232C_EN-A.pdf OM_ITVx000_DOC1070538EN-1.pdf

Specifications are subject to change without prior notice and any obligation on the part of the manufacturer.

SMC CORPORATION Zuazobidea 14, 01012, Vitoria-Gasteiz, Álava +34 945184100 +34 945184126 www.smc.eu support.marketingeurope@smc.com