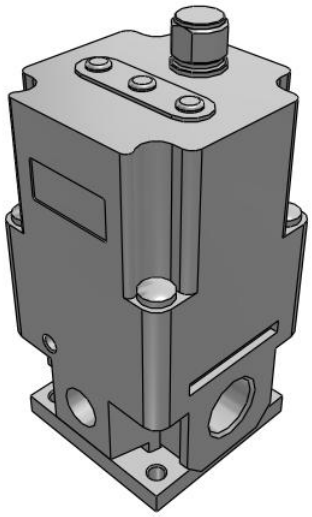

ITV1000/2000/3000, Electro-Pneumatic Regulator
ITV2030-01F3N

Datasheet

General series information

- Pressure range: 0.005 to 0.9 MPa
- Maximum flow rate: 4000 l/min (ANR)
- Port sizes: 1/8, 1/4, 3/8, 1/2
- Applicable fieldbus protocols: IO-Link, CC-Link, DeviceNet™, PROFIBUS, RS-232C.

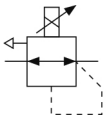

Electro-pneumatic regulator

Standard specifications

Input Signal	0 (Current Style 4~20mADC)
Options	None
Accessory	None
Pressure Range	3 (0.005~0.5MPa)
Pressure Display Unit	MPa
Port Size	3 [3/8 (2000,3000)]
Model	20 (1500 L/min)
Power Voltage	0 (24VDC)
Monitor Output	1 (Analog Output 1~5VDC)
Thread	F [G(PF)]
Cable Connector	N (w/oCable Connector)
Maximum temperature of pressure medium	50 °C
Minimum temperature of pressure medium	0 °C
Maximum operating pressure	1.0 MPa
Maximum ambient temperature	50 °C
Minimum ambient temperature	0 °C
Approvals	CE
Protection class with connector	IP65
Current consumption	0.12 A

Specifications are subject to change without prior notice and any obligation on the part of the manufacturer.

SMC United Kingdom +34 945184126 sales@smc.uk

Enclosure	IP65
Sensitivity	0.2% (F.S.)
Repeatability	±0.5% (F.S.)
Set pressure range	0.005 - 0.5 MPa
Linearity	±1% (F.S.)
Power supply voltage	24 VDC ±10%
Min. supply pressure	Set pressure +0.1 MPa
Accuracy	±2%F.S. ±1 digit
Temperature characteristics	±0.12% (F.S.)/C
Minimum display unit	0.001
Hysteresis	0.5% (F.S.)
Input signal Current type	4 - 20 mA DC
Input impedance current type	250 Ω
Input impedance Voltage type	6.5 kΩ
Output signal Analogue	1 to 5 VDC (Output impedance: Approximately 1 kΩ) Output accuracy within ±6% (Full span)
Weight	0.350 Kg

Specifications are subject to change without prior notice and any obligation on the part of the manufacturer.

SMC United Kingdom +34 945184126 sales@smc.uk

Dimensions

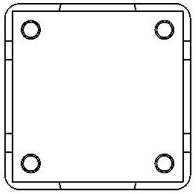

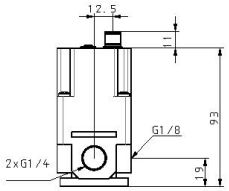

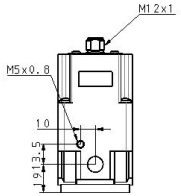

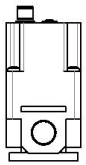

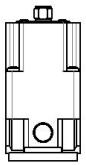

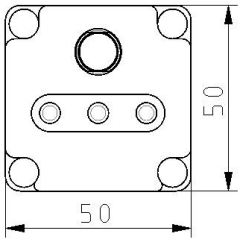

Specifications are subject to change without prior notice and any obligation on the part of the manufacturer.

SMC United Kingdom +34 945184126 sales@smc.uk

Constructions

ITV2000

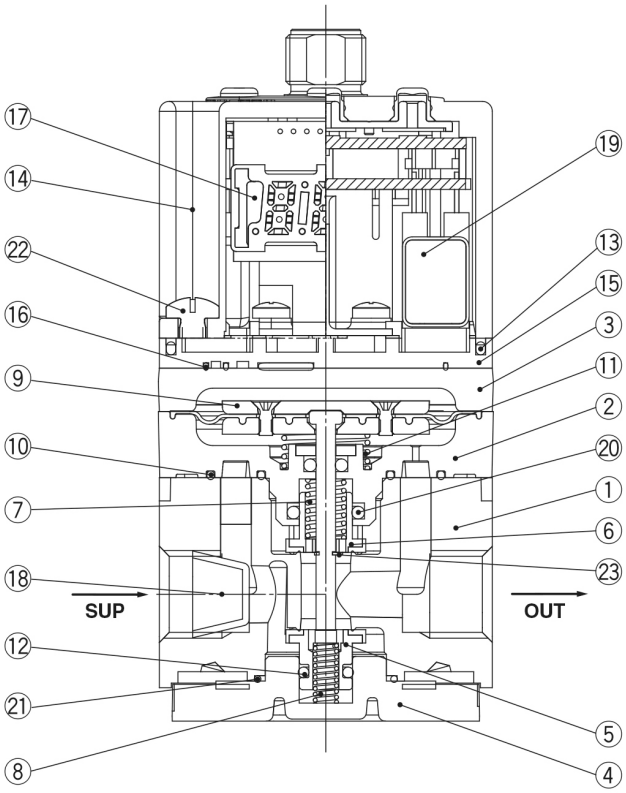

Main Component Parts

	No.	Description	Material
◆	1	Body	Aluminum alloy
◆	2	Intermediate body	Aluminum alloy
	3	Cover	Aluminum alloy
◆	4	Valve guide	Aluminum alloy
◆	5	Valve (Supply valve)	HNBR/Brass
◆	6	Valve (Exhaust valve)	HNBR/Brass
◆	7	Valve spring	Stainless steel
◆	8	Valve spring	Stainless steel
◆	9	Diaphragm assembly	Stainless steel
			Aluminum alloy
			HNBR
			Steel
◆	10	Seal	NBR
◆	11	Bias spring	Stainless steel
◆	12	O-ring	NBR
	13	Seal	NBR
	14	Bowl assembly	Resin
			Silicone rubber
	15	Sub-plate	Resin
	16	Seal	NBR
	17	Control circuit assembly	—
◆	18	Filter	Stainless steel
	19	Solenoid valve	—
◆	20	O-ring	NBR
	21	O-ring	NBR
	22	Round head Phillips screw	Steel
◆	23	Retaining ring	Stainless steel

∗ Parts in contact with fluid are indicated with a mark ◆.

Specifications are subject to change without prior notice and any obligation on the part of the manufacturer.

SMC United Kingdom +34 945184126 sales@smc.uk

Additional information

Catalogue	ITV-G_EU.pdf
Declaration of conformity	newDoC_ITVx000-G_EN.pdf newDoC_ITVx000-H_EN.pdf newDoC_ITVx000_IO-Link-EN.pdf DoC_ITVx_TF00023-B.pdf
Installation manuals	IM_ITVx000_EN-A.pdf IM_ITVx000-IO-Link_EN.pdf IM_ITV3000_EN-A.pdf
Operation manuals	OM_ITVx000-60_EN-D.pdf OM_ITVx000-CC-Link_EN-D.pdf OM_ITVx000-PROFIBUS-DP_EN-A.pdf OM_ITVx000-IO-Link_EN-A.pdf OM_ITVx000-52_53_EN-E.pdf OM_ITVx000-DeviceNet_EN-E.pdf OM_ITVx000-RS-232C_EN-A.pdf OM_ITVx000_DOC1070538EN-1.pdf

Specifications are subject to change without prior notice and any obligation on the part of the manufacturer.

SMC United Kingdom +34 945184126 sales@smc.uk