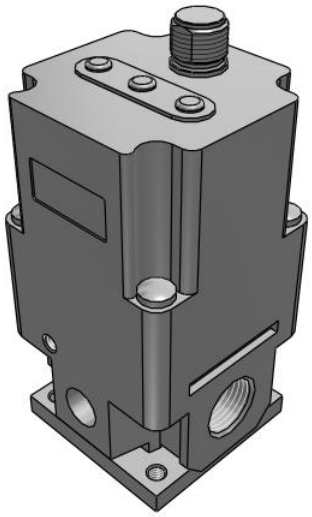

# ITV1000/2000/3000, Electro-Pneumatic Regulator
## ITV2010-04F3N

Datasheet

## General series information

- Pressure range: 0.005 to 0.9 MPa
- Maximum flow rate: 4000 l/min (ANR)
- Port sizes: 1/8, 1/4, 3/8, 1/2
- Applicable fieldbus protocols: IO-Link, CC-Link, DeviceNet™, PROFIBUS, RS-232C.

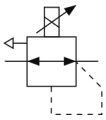

*Electro-pneumatic regulator*

## Standard specifications

| | |
|---|---|
| Model | 20 (1500 L/min) |
| Pressure Range | 1 (0.005~0.1MPa) |
| Power Voltage | 0 (24VDC) |
| Input Signal | 0 (Current Style 4~20mADC) |
| Monitor Output | 4 (Analog Output 4~20mA Sink Requires a Sourcing Type Analog Input Module) |
| Thread | F [G(PF)] |
| Port Size | 3 [3/8 (2000,3000)] |
| Accessory | None |
| Cable Connector | N (w/oCable Connector) |
| Pressure Display Unit | MPa |
| Options | None |
| Maximum temperature of pressure medium | 50 °C |
| Minimum temperature of pressure medium | 0 °C |
| Maximum operating pressure | 0.2 MPa |
| Maximum ambient temperature | 50 °C |
| Minimum ambient temperature | 0 °C |
| Approvals | CE |
| Protection class with connector | IP65 |

*Specifications are subject to change without prior notice and any obligation on the part of the manufacturer.*



**SMC CORPORATION** Zuazobidea 14, 01012, Vitoria-Gasteiz, Álava +34 945184100 +34 945184126 www.smc.eu support.marketingeurope@smc.com

| | |
|---|---|
| Current consumption | 0.12 A |
| Enclosure | IP65 |
| Sensitivity | 0.2% (F.S.) |
| Repeatability | ±0.5% (F.S.) |
| Set pressure range | 0.005 - 0.1 MPa |
| Linearity | ±1% (F.S.) |
| Power supply voltage | 24 VDC ±10% |
| Min. supply pressure | Set pressure +0.1 MPa |
| Accuracy | ±2%F.S. ±1 digit |
| Temperature characteristics | ±0.12% (F.S.)/C |
| Minimum display unit | 0.001 |
| Hysteresis | 0.5% (F.S.) |
| Input signal Current type | 4 - 20 mA DC |
| Input impedance current type | 250 Ω |
| Input impedance Voltage type | 6.5 kΩ |
| Output signal Analogue | 4 to 20 mA DC (Sink type) (Load impedance: 250Ω or less)<br>Output accuracy within ±6% (Full span) |
| Weight | 0.350 Kg |

Specifications are subject to change without prior notice and any obligation on the part of the manufacturer.



SMC CORPORATION Zuazobidea 14, 01012, Vitoria-Gasteiz, Álava +34 945184100 +34 945184126 www.smc.eu support.marketingeurope@smc.com

# Dimensions

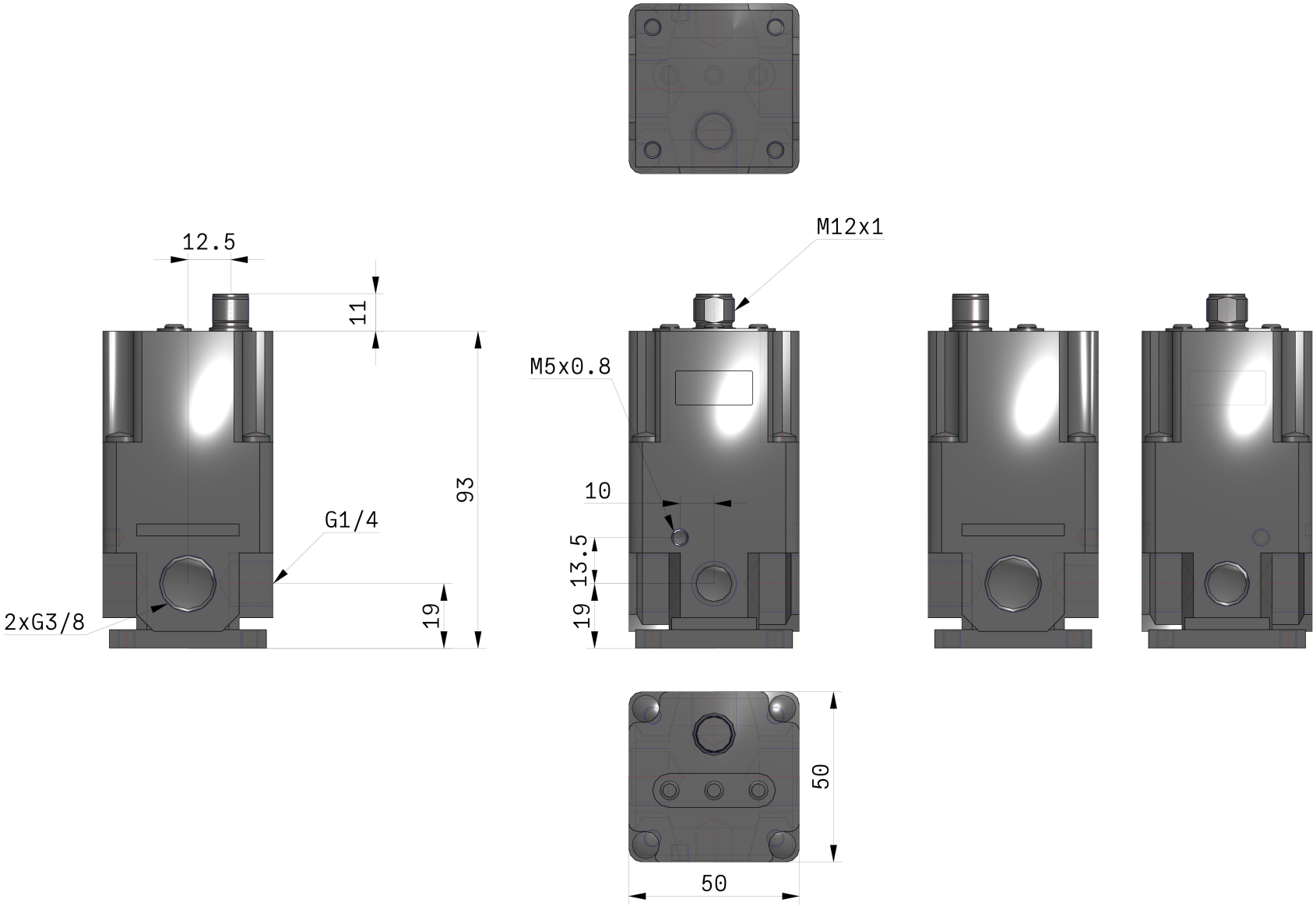


Specifications are subject to change without prior notice and any obligation on the part of the manufacturer.



SMC CORPORATION Zuazobidea 14, 01012, Vitoria-Gasteiz, Álava +34 945184100 +34 945184126 www.smc.eu support.marketingeurope@smc.com

# Constructions

## ITV2000

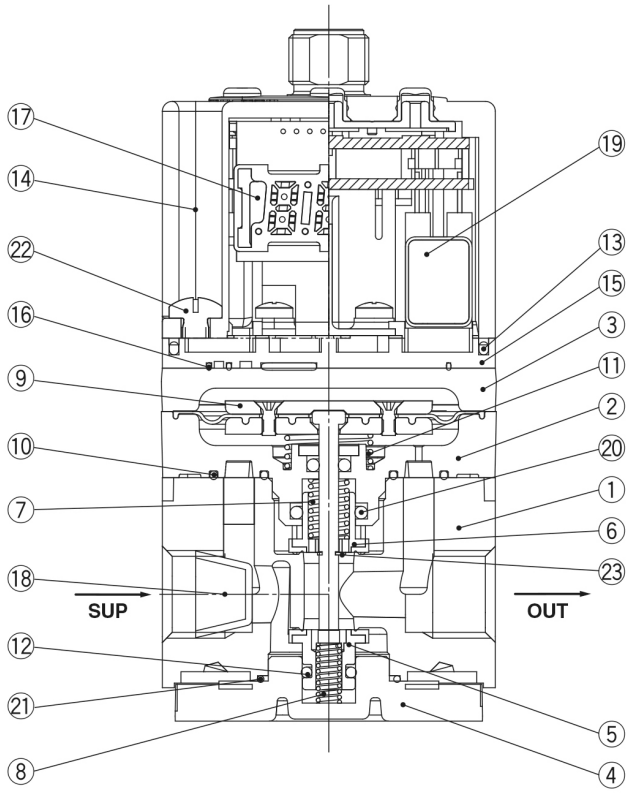


### Main Component Parts

| | No. | Description | Material |
|---|---|---|---|
| ◆ | 1 | Body | Aluminum alloy |
| ◆ | 2 | Intermediate body | Aluminum alloy |
| | 3 | Cover | Aluminum alloy |
| ◆ | 4 | Valve guide | Aluminum alloy |
| ◆ | 5 | Valve (Supply valve) | HNBR/Brass |
| ◆ | 6 | Valve (Exhaust valve) | HNBR/Brass |
| ◆ | 7 | Valve spring | Stainless steel |
| ◆ | 8 | Valve spring | Stainless steel |
| ◆ | 9 | Diaphragm assembly | Stainless steel |
| | | | Aluminum alloy |
| | | | HNBR |
| | | | Steel |
| ◆ | 10 | Seal | NBR |
| ◆ | 11 | Bias spring | Stainless steel |
| ◆ | 12 | O-ring | NBR |
| | 13 | Seal | NBR |
| | 14 | Bowl assembly | Resin |
| | | | Silicone rubber |
| | 15 | Sub-plate | Resin |
| | 16 | Seal | NBR |
| | 17 | Control circuit assembly | — |
| ◆ | 18 | Filter | Stainless steel |
| | 19 | Solenoid valve | — |
| ◆ | 20 | O-ring | NBR |
| | 21 | O-ring | NBR |
| | 22 | Round head Phillips screw | Steel |
| ◆ | 23 | Retaining ring | Stainless steel |

∗ Parts in contact with fluid are indicated with a mark ◆.

Specifications are subject to change without prior notice and any obligation on the part of the manufacturer.



SMC CORPORATION Zuazobidea 14, 01012, Vitoria-Gasteiz, Álava +34 945184100 +34 945184126 www.smc.eu support.marketingeurope@smc.com

# Additional information

| | |
|---|---|
| Catalogue | ITV-G_EU.pdf |
| Declaration of conformity | newDoC_ITVx000-G_EN.pdf<br>newDoC_ITVx000-H_EN.pdf<br>newDoC_ITVx000_IO-Link-EN.pdf<br>DoC_ITVx_TF00023-B.pdf |
| Installation manuals | IM_ITVx000_EN-A.pdf<br>IM_ITVx000-IO-Link_EN-A.pdf |
| Operation manuals | OM_ITVx000-60_EN-D.pdf<br>OM_ITV2_OM00109EN-F.pdf<br>OM_ITV2_00145_EN-B.pdf<br>OM_ITVx000-CC-Link_EN-D.pdf<br>OM_ITVx000-PROFIBUS-DP_EN-A.pdf<br>OM_ITVx000-DeviceNet_EN-E.pdf<br>OM_ITVx000-RS-232C_EN-A.pdf<br>OM_ITVx000_DOC1070538EN-1.pdf |

Specifications are subject to change without prior notice and any obligation on the part of the manufacturer.



SMC CORPORATION Zuazobidea 14, 01012, Vitoria-Gasteiz, Álava +34 945184100 +34 945184126 www.smc.eu support.marketingeurope@smc.com