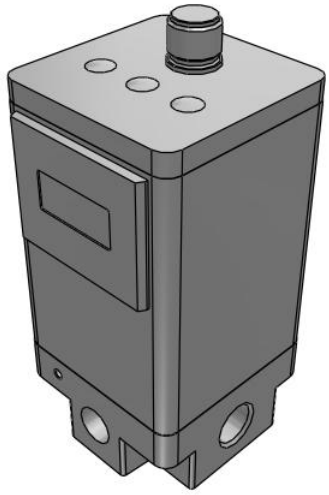

ITV1000/2000/3000, Electro-Pneumatic Regulator

ITV1010-ILF2N

Datasheet

General series information

- Pressure range: 0.005 to 0.9 MPa
- Maximum flow rate: 4000 l/min (ANR)
- Port sizes: 1/8, 1/4, 3/8, 1/2
- Applicable fieldbus protocols: IO-Link, CC-Link, DeviceNet™, PROFIBUS, RS-232C.

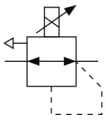

Electro-pneumatic regulator

Standard specifications

Model	10 [200 l/min (ANR)]
Pressure Range	1 (0.005 to 0.1 MPa)
Power Voltage	0 (24 VDC)
Input Signal	IL (I/O-Link)
Monitor Output	None
Thread	F (G[PF])
Port Size	2 (1/4 [2000,3000])
Accessory	None
Cable Connector Type	N (Without Cable Connector)
Pressure Display Unit	MPa
Options	None
Maximum temperature of pressure medium	50 °C
Minimum temperature of pressure medium	0 °C
Maximum operating pressure	0.2 MPa
Maximum ambient temperature	50 °C
Minimum ambient temperature	0 °C
Approvals	CE
Protection class with connector	IP65
Current consumption	0.12 A

Specifications are subject to change without prior notice and any obligation on the part of the manufacturer.

SMC CORPORATION Zuazobidea 14, 01012, Vitoria-Gasteiz, Álava +34 945184100 +34 945184126 www.smc.eu support.marketingeurope@smc.com

Enclosure	IP65
Sensitivity	0.2% (F.S.)
Repeatability	±0.5% (F.S.)
Set pressure range	0.005 - 0.1 MPa
Linearity	±1% (F.S.)
Power supply voltage	24 VDC ±10%
Min. supply pressure	Set pressure +0.1 MPa
Accuracy	±2%F.S. ±1 digit
Temperature characteristics	±0.12% (F.S.)/C
Minimum display unit	0.001
Hysteresis	0.5% (F.S.)
Input impedance current type	250 Ω
Input impedance Voltage type	6.5 kΩ
Weight	0.320 Kg

Specifications are subject to change without prior notice and any obligation on the part of the manufacturer.

SMC CORPORATION Zuazobidea 14, 01012, Vitoria-Gasteiz, Álava +34 945184100 +34 945184126 www.smc.eu support.marketingeurope@smc.com

Dimensions

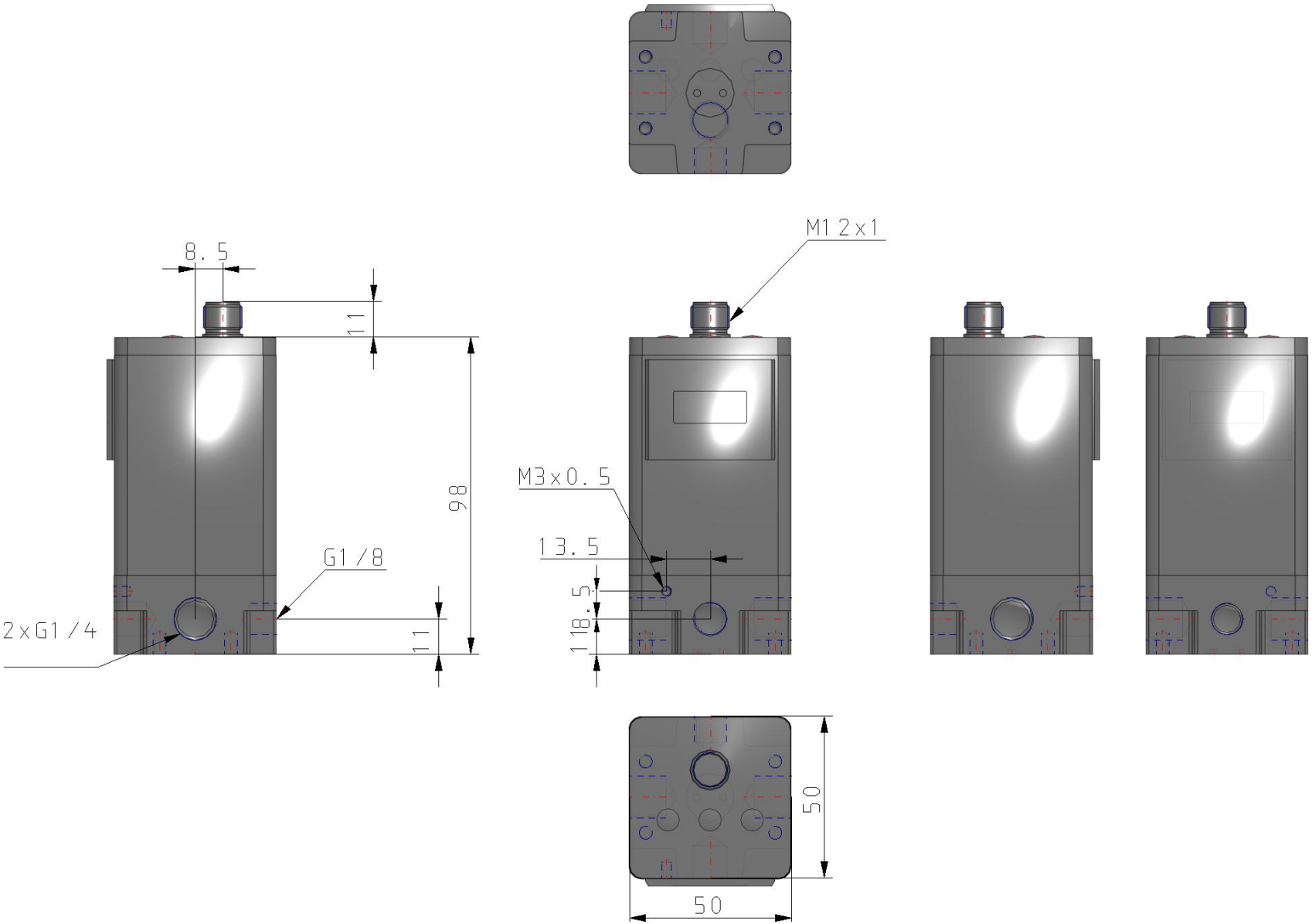

Specifications are subject to change without prior notice and any obligation on the part of the manufacturer.

SMC CORPORATION Zuazobidea 14, 01012, Vitoria-Gasteiz, Álava +34 945184100 +34 945184126 www.smc.eu support.marketingeurope@smc.com

Constructions

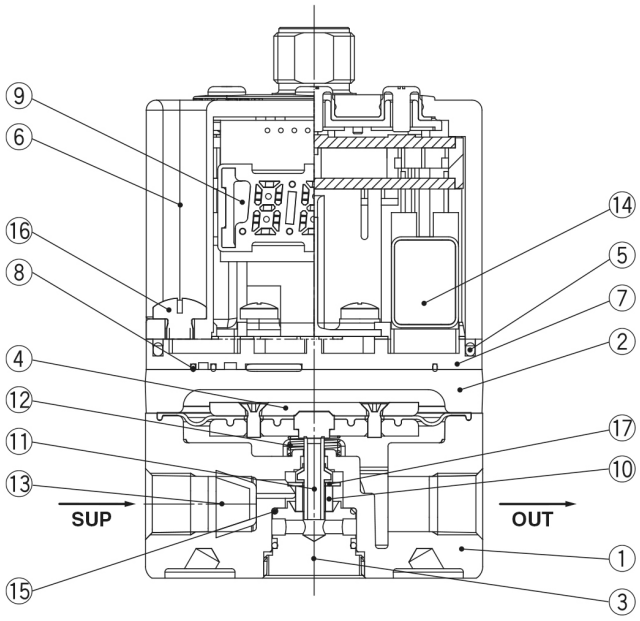

Main Component Parts

	No.	Description	Material
◆	1	Body	Aluminum alloy
	2	Cover	Aluminum alloy
◆	3	Valve guide	Aluminum alloy
◆	4	Diaphragm assembly	Aluminum alloy
			HNBR
			Steel
	5	Seal	NBR
	6	Bowl assembly	Resin
			Silicone rubber
	7	Sub-plate	Resin
	8	Seal	NBR
	9	Control circuit assembly	—
◆	10	Bumper	HNBR
◆	11	Valve	Stainless steel
			HNBR
◆	12	Bias spring	Stainless steel
◆	13	Filter	Stainless steel
	14	Solenoid valve	—
◆	15	O-ring	NBR
	16	Round head Phillips screw	Steel
◆	17	Flat washer	Stainless steel

* Parts in contact with fluid are indicated with a mark ◆.

Specifications are subject to change without prior notice and any obligation on the part of the manufacturer.

SMC CORPORATION Zuazobidea 14, 01012, Vitoria-Gasteiz, Álava +34 945184100 +34 945184126 www.smc.eu support.marketingeurope@smc.com

Additional information

Catalogue	ITV-G_EU.pdf
Declaration of conformity	newDoC_ITVx000-G_EN.pdf newDoC_ITVx000-H_EN.pdf newDoC_ITVx000_IO-Link-EN.pdf DoC_ITVx_TF00023-B.pdf
Installation manuals	IM_ITVx000_EN-A.pdf IM_ITVx000-IO-Link_EN-A.pdf
Operation manuals	OM_ITVx000-60_EN-D.pdf OM_ITV2_OM00109EN-F.pdf OM_ITV2_00145_EN-B.pdf OM_ITVx000-CC-Link_EN-D.pdf OM_ITVx000-PROFIBUS-DP_EN-A.pdf OM_ITVx000-DeviceNet_EN-E.pdf OM_ITVx000-RS-232C_EN-A.pdf OM_ITVx000_DOC1070538EN-1.pdf

Specifications are subject to change without prior notice and any obligation on the part of the manufacturer.

SMC CORPORATION Zuazobidea 14, 01012, Vitoria-Gasteiz, Álava +34 945184100 +34 945184126 www.smc.eu support.marketingeurope@smc.com