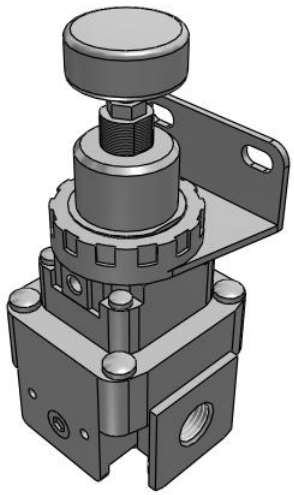

# IR1200/2200/3200-A, Regulator
## IR2220-F02B-A

Datasheet

## General series information

- Lightweight.
- Addition of bottom and front exhaust.
- Repeatability ±1.0 % (full span).
- High flow rate.
- Max. supply pressure: 1.0 MPa.

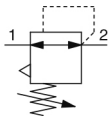


*Regulator with backflow function*

## Standard specifications

| | |
|---|---|
| Body Size | 2 |
| Set Pressure | 2 (0.02 to 0.8 MPa) |
| Exhaust Direction | 0 (Bottom Exhaust) |
| Thread | F (G) |
| Port Size | 02 (1/4) |
| Option | B (w/Bracket) |
| Semi-standard | None |
| Pressure medium | Air |
| Maximum temperature of pressure medium | 60 ºC |
| Minimum temperature of pressure medium | -5 °C (with no freezing) |
| Maximum operating pressure | 1.0 MPa |
| Proof pressure | 1.5 MPa |
| Maximum ambient temperature | 60 ºC |
| Minimum ambient temperature | -5 °C (with no freezing) |
| Repeatability | Within ±1 % of full span |
| Air consumption (At supply pressure of 1.0 MPa) | 1 l/min (ANR) or less |
| Max. supply pressure | 1.0 MPa |
| Min. supply pressure | Set pressure +0.05 MPa |

*Specifications are subject to change without prior notice and any obligation on the part of the manufacturer.*



**SMC CORPORATION** Zuazobidea 14, 01012, Vitoria-Gasteiz, Álava +34 945184100 +34 945184126 www.smc.eu support.marketingeurope@smc.com

| | |
|---|---|
| Approvals | No need |
| Weight | 0.280 Kg |

Specifications are subject to change without prior notice and any obligation on the part of the manufacturer.



SMC CORPORATION Zuazobidea 14, 01012, Vitoria-Gasteiz, Álava +34 945184100 +34 945184126 www.smc.eu support.marketingeurope@smc.com

# Dimensions

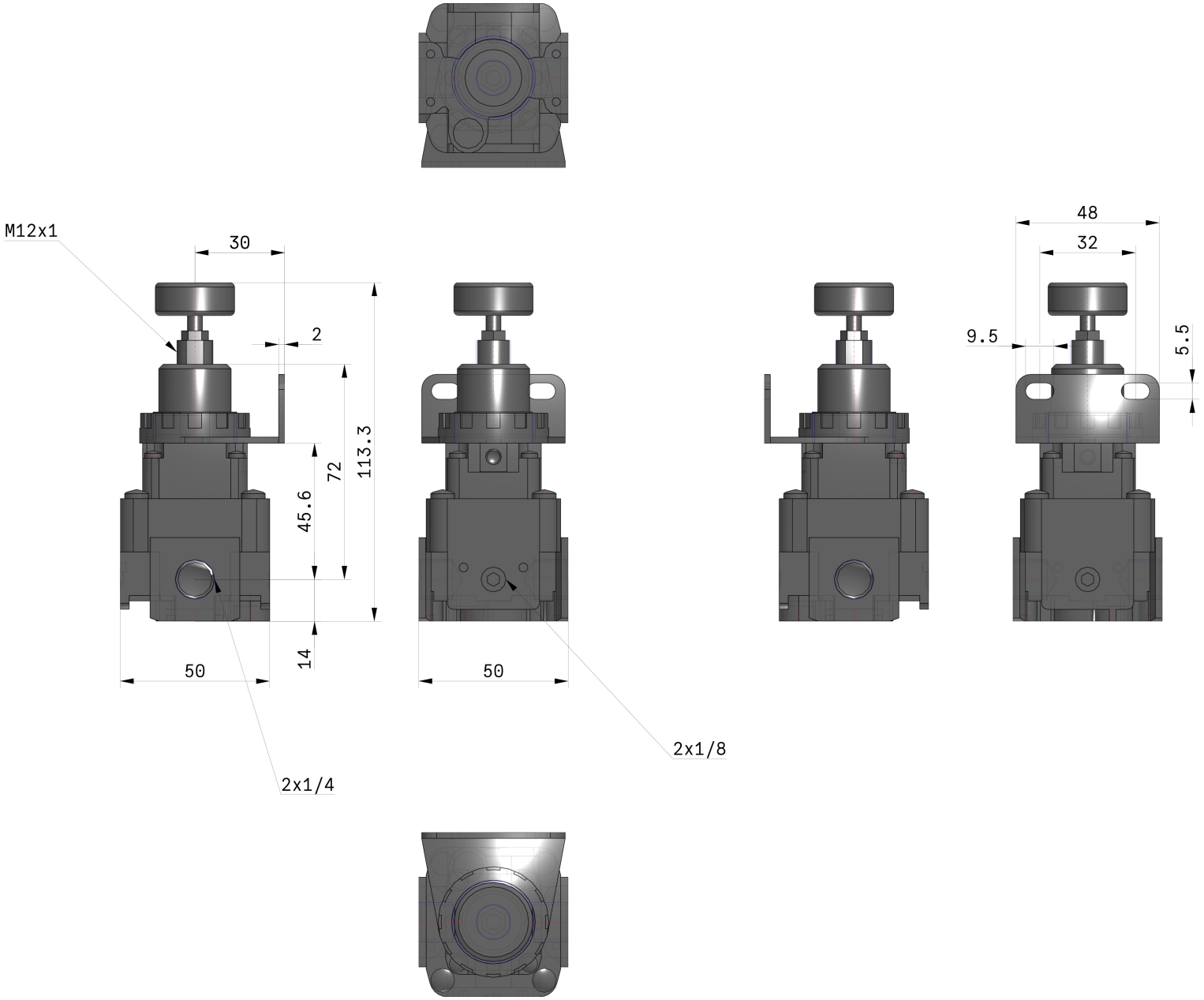


Specifications are subject to change without prior notice and any obligation on the part of the manufacturer.



SMC CORPORATION Zuazobidea 14, 01012, Vitoria-Gasteiz, Álava +34 945184100 +34 945184126 www.smc.eu support.marketingeurope@smc.com

# Constructions

## Basic type (Knob): IR22□0-A

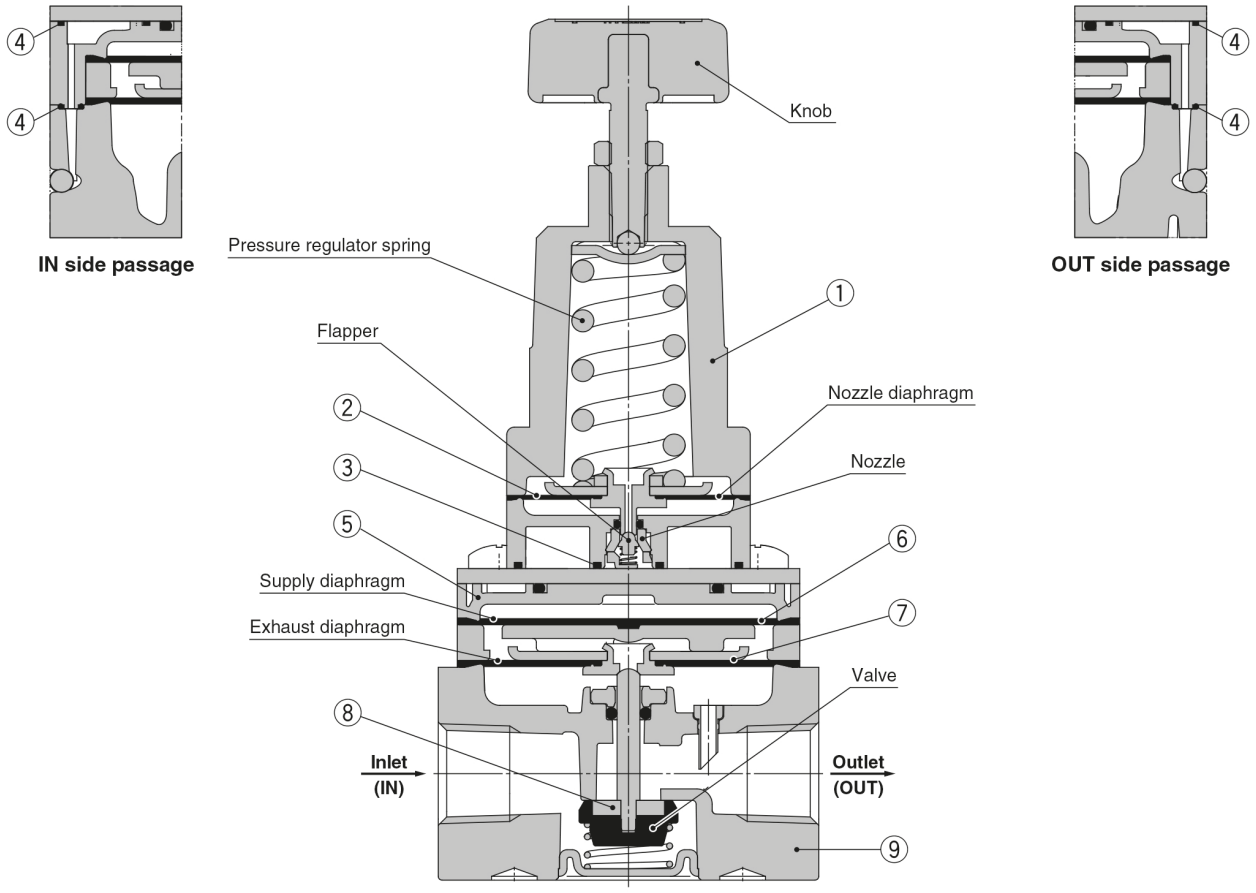


## Component Parts

| No. | Description | Material | | |
|---|---|---|---|---|
| | | IR1200-A | IR2200-A | IR3200-A |
| 1 | **Bonnet** | Aluminium die-casted | | |
| 2 | **Nozzle diaphragm assembly** | Aluminium, Weather resistant NBR | | |
| 3 | **Seal** | HNBR | | |
| 4 | **Seal** | NBR | | |
| 5 | **Diaphragm spacer** | Polyacetal | | |
| 6 | **Supply diaphragm** | Weather resistant NBR | | — |
| 7 | **Exhaust diaphragm assembly** | Steel, Aluminium, Weather resistant NBR | | Aluminium, Weather resistant NBR, HNBR |
| 8 | **Valve assembly** | Stainless steel, Aluminium, HNBR | | Aluminium, HNBR |
| 9 | **Body** | Aluminium die-casted | | |

*Specifications are subject to change without prior notice and any obligation on the part of the manufacturer.*



**SMC CORPORATION** Zuazobidea 14, 01012, Vitoria-Gasteiz, Álava +34 945184100 +34 945184126 www.smc.eu support.marketingeurope@smc.com

# Additional information

| | |
|---|---|
| Catalogue | IR200A-Aa_EU.pdf |
| Operation manuals | OM_IR2120_OM00004EN-F.pdf<br>OM_IR2000_OM00009EN-B.pdf<br>OM_IR3000_OM00016EN-B.pdf<br>OM_IR20_OM00010EN-B.pdf<br>OM_IR3000_OM00015EN-A.pdf |

Specifications are subject to change without prior notice and any obligation on the part of the manufacturer.



SMC CORPORATION Zuazobidea 14, 01012, Vitoria-Gasteiz, Álava +34 945184100 +34 945184126 www.smc.eu support.marketingeurope@smc.com