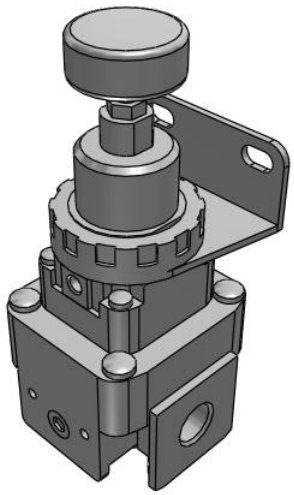

IR1200/2200/3200-A, Regulator
IR2200-F02B-A

Datasheet

General series information

- Lightweight.
- Addition of bottom and front exhaust.
- Repeatability ±1.0 % (full span).
- High flow rate.
- Max. supply pressure: 1.0 MPa.

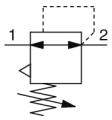

Regulator with backflow function

Standard specifications

Body Size	2
Set pressure	0 (0.02 to 0.2 MPa)
Exhaust Direction	0 (Bottom Exhaust)
Thread	F (G)
Port Size	02 (1/4)
Option	B (With Bracket)
Semi-standard	None
Pressure medium	Air
Maximum temperature of pressure medium	60 ºC
Minimum temperature of pressure medium	-5 °C (with no freezing)
Maximum operating pressure	1.0 MPa
Proof pressure	1.5 MPa
Maximum ambient temperature	60 ºC
Minimum ambient temperature	-5 °C (with no freezing)
Repeatability	Within ±1 % of full span
Air consumption (At supply pressure of 1.0 MPa)	1 l/min (ANR) or less
Max. supply pressure	1.0 MPa
Min. supply pressure	Set pressure +0.05 MPa

Specifications are subject to change without prior notice and any obligation on the part of the manufacturer.

SMC CORPORATION Zuazobidea 14, 01012, Vitoria-Gasteiz, Álava +34 945184100 +34 945184126 www.smc.eu support.marketingeurope@smc.com

Approvals	No need
Weight	0.280 Kg

Specifications are subject to change without prior notice and any obligation on the part of the manufacturer.

SMC CORPORATION Zuazobidea 14, 01012, Vitoria-Gasteiz, Álava +34 945184100 +34 945184126 www.smc.eu support.marketingeurope@smc.com

Dimensions

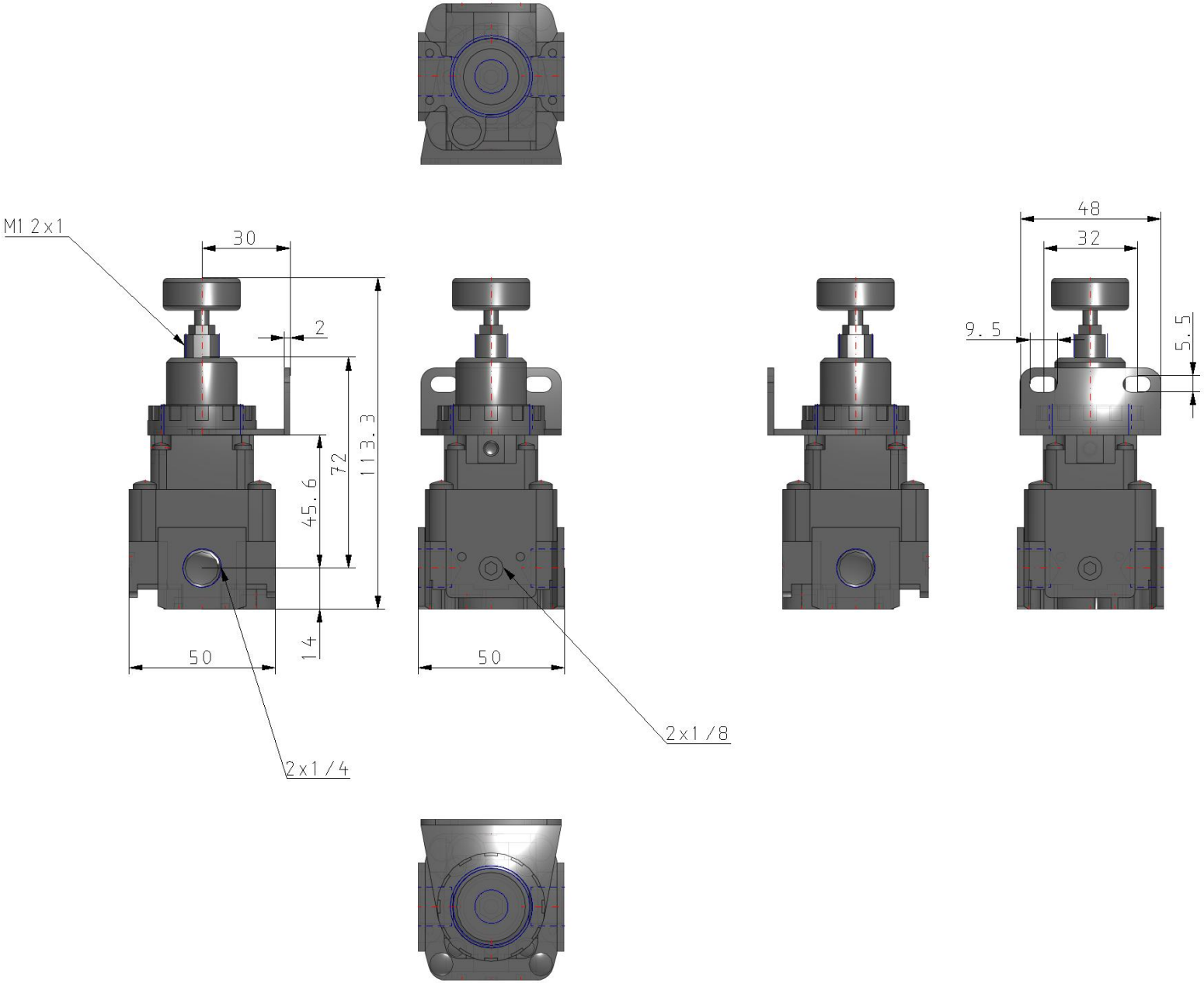

Specifications are subject to change without prior notice and any obligation on the part of the manufacturer.

SMC CORPORATION Zuazobidea 14, 01012, Vitoria-Gasteiz, Álava +34 945184100 +34 945184126 www.smc.eu support.marketingeurope@smc.com

Constructions

Basic type (Knob): IR22□0-A

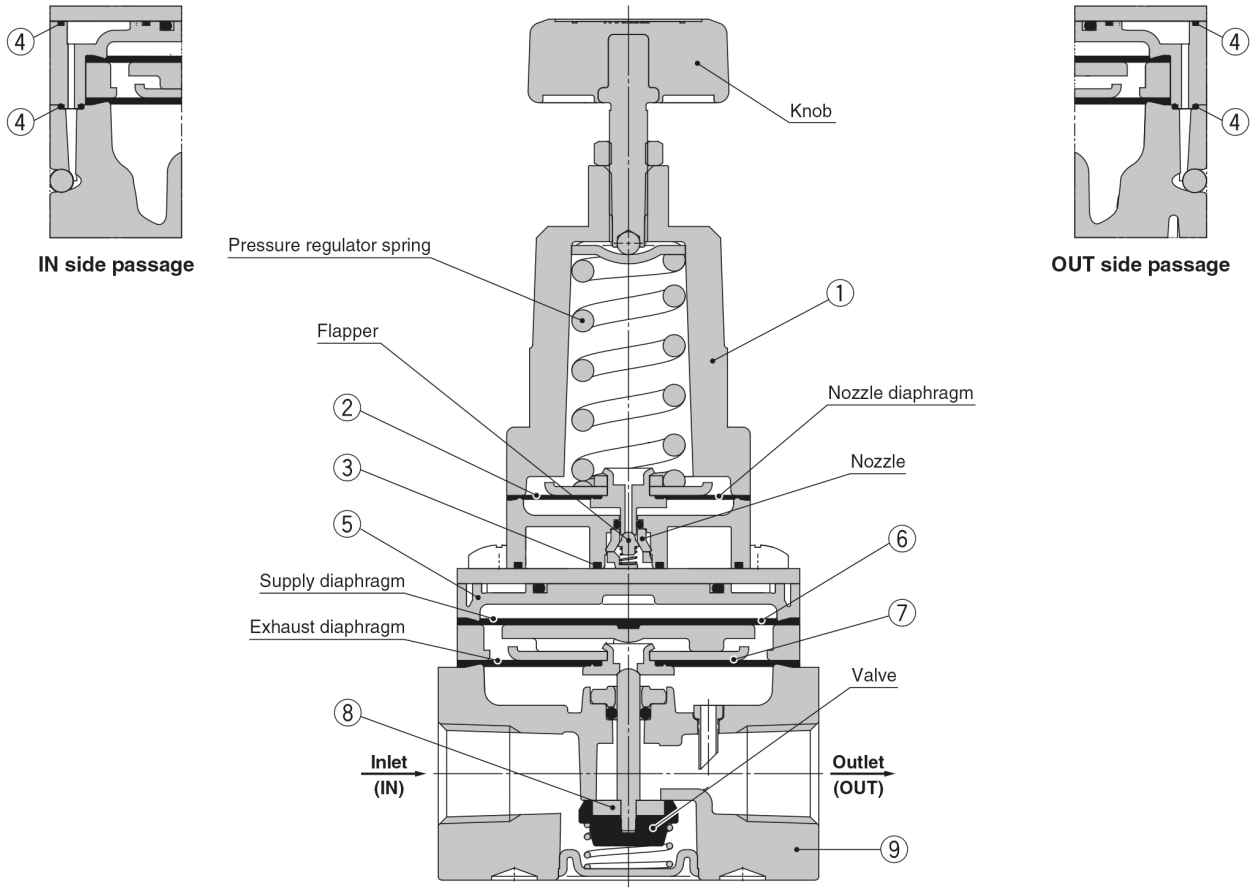

Component Parts

No.	Description	Material		
		IR1200-A	IR2200-A	IR3200-A
1	**Bonnet**	Aluminium die-casted		
2	**Nozzle diaphragm assembly**	Aluminium, Weather resistant NBR		
3	**Seal**	HNBR		
4	**Seal**	NBR		
5	**Diaphragm spacer**	Polyacetal		
6	**Supply diaphragm**	Weather resistant NBR		—
7	**Exhaust diaphragm assembly**	Steel, Aluminium, Weather resistant NBR		Aluminium, Weather resistant NBR, HNBR
8	**Valve assembly**	Stainless steel, Aluminium, HNBR		Aluminium, HNBR
9	**Body**	Aluminium die-casted		

Specifications are subject to change without prior notice and any obligation on the part of the manufacturer.

SMC CORPORATION Zuazobidea 14, 01012, Vitoria-Gasteiz, Álava +34 945184100 +34 945184126 www.smc.eu support.marketingeurope@smc.com

Additional information

Catalogue	IR200A-Aa_EU.pdf
Operation manuals	OM_IR2120_OM00004EN-F.pdf OM_IR2000_OM00009EN-B.pdf OM_IR3000_OM00016EN-B.pdf OM_IR20_OM00010EN-B.pdf OM_IR3000_OM00015EN-A.pdf

Specifications are subject to change without prior notice and any obligation on the part of the manufacturer.

SMC CORPORATION Zuazobidea 14, 01012, Vitoria-Gasteiz, Álava +34 945184100 +34 945184126 www.smc.eu support.marketingeurope@smc.com