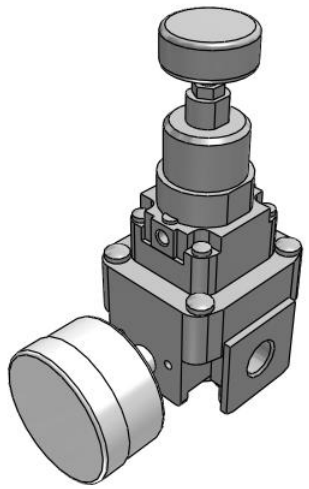

IR1000/2000/3000-A, Precision Regulator

IR2010-F02G-A

Datasheet

General series information

- Lightweight.
- Addition of bottom and front exhaust.
- Precision regulator, with repeatability ± 0.5 % (full span). Sensitivity: 0.2 % (full span).
- Max. supply pressure: 1.0 MPa.

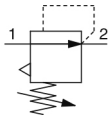

Pressure control valve, relieving pressure regulator, adjustable

Standard specifications

Body Size	2
Set pressure	1 (0.01 to 0.4 MPa)
Exhaust Direction	0 (Bottom Exhaust)
Thread	F (G)
Port Size	02 (1/4)
Option	G (Round type pressure gauge)
Semi-standard	None
Pressure medium	Air
Maximum temperature of pressure medium	60 °C
Minimum temperature of pressure medium	-5 °C [with no freezing]
Proof pressure	1.5 MPa
Maximum ambient temperature	60 °C
Minimum ambient temperature	-5 °C [with no freezing]
Sensitivity	Within 0.2% of full span
Repeatability	Within 0.5% of full span
Set pressure range	0.01 to 0.4 MPa
Air consumption (At supply pressure of 1.0 MPa)	1 l/min (ANR) or less
Max. supply pressure	1.0 MPa
Min. supply pressure	0.05 MPa

Specifications are subject to change without prior notice and any obligation on the part of the manufacturer.

SMC CORPORATION Zuazobidea 14, 01012, Vitoria-Gasteiz, Álava +34 945184100 +34 945184126 www.smc.eu emcmarketing@smc.smces.es

Weight	0.320 Kg

Specifications are subject to change without prior notice and any obligation on the part of the manufacturer.

SMC CORPORATION Zuazobidea 14, 01012, Vitoria-Gasteiz, Álava +34 945184100 +34 945184126 www.smc.eu emcmarketing@smc.smces.es

Dimensions

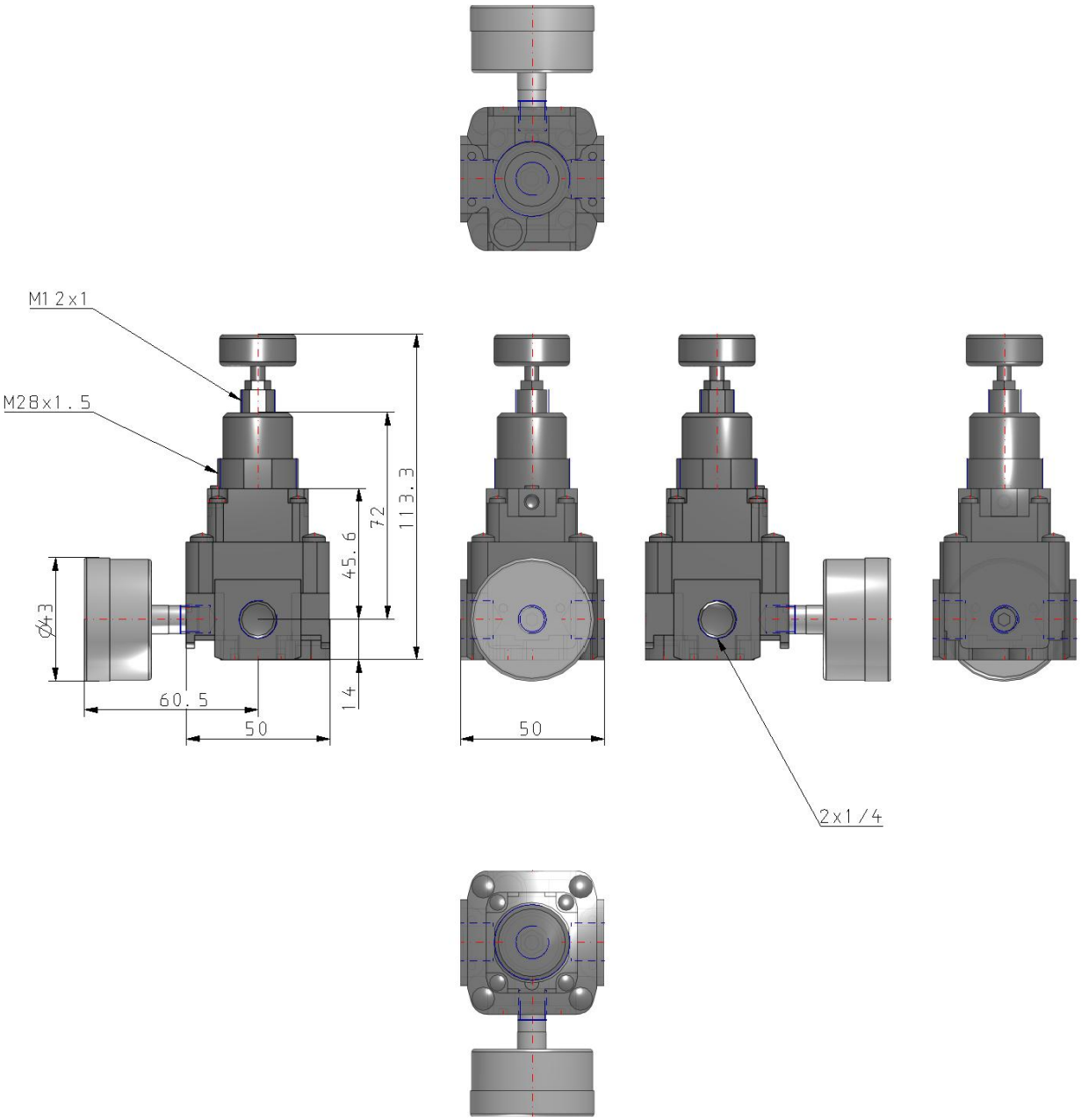

Specifications are subject to change without prior notice and any obligation on the part of the manufacturer.

SMC CORPORATION Zuazobidea 14, 01012, Vitoria-Gasteiz, Álava +34 945184100 +34 945184126 www.smc.eu emcmarketing@smc.smces.es

Constructions

Basic type (Knob): IR20□0-A

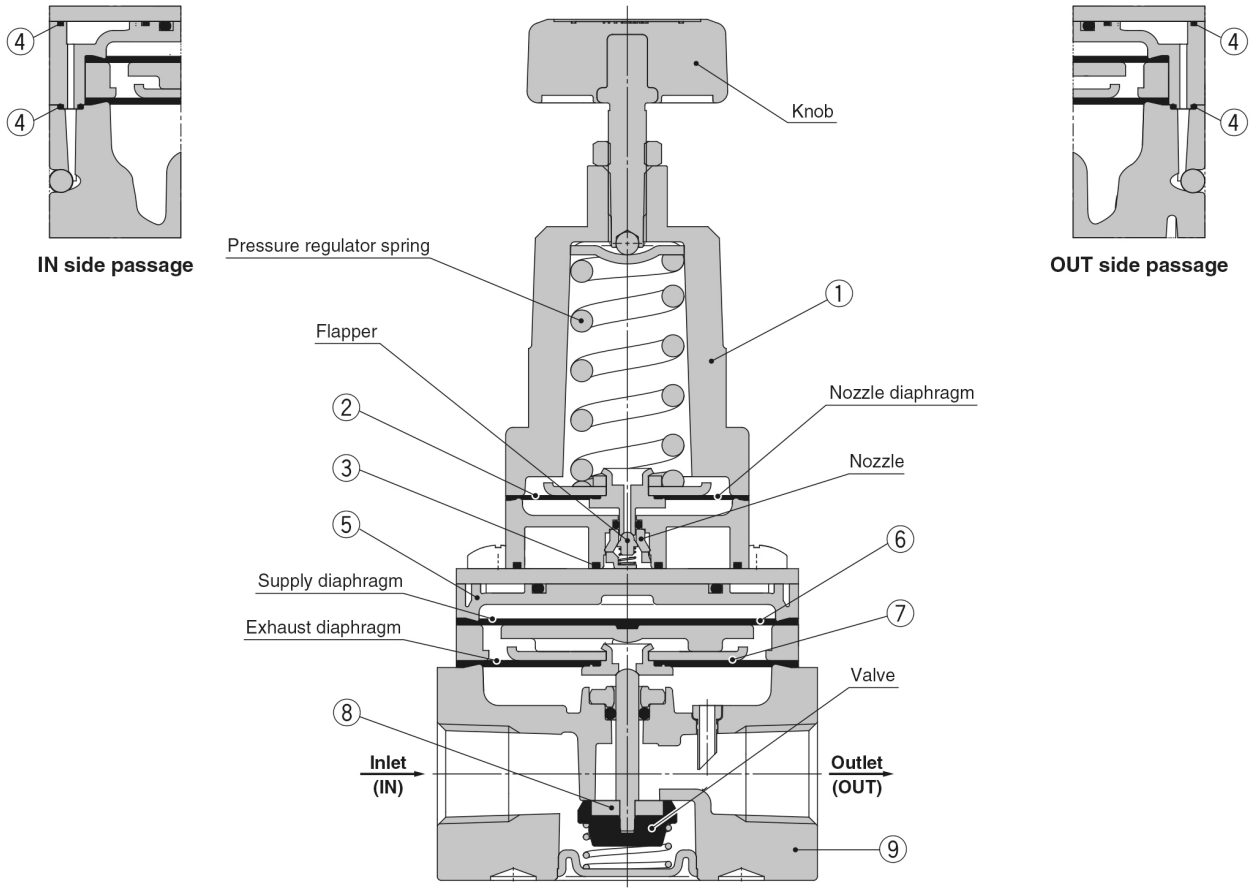

Component Parts

No.	Description	Material		
		IR1000-A	IR2000-A	IR3000-A
1	**Bonnet**	Aluminium die-casted		
2	**Nozzle diaphragm assembly**	Aluminium, Weather resistant NBR		
3	**Seal**	HNBR		
4	**Seal**	NBR		
5	**Diaphragm spacer**	Polyacetal		
6	**Supply diaphragm**	Weather resistant NBR		—
7	**Exhaust diaphragm assembly**	Steel, Aluminium, Weather resistant NBR		Aluminium, Weather resistant NBR, HNBR
8	**Valve assembly**	Stainless steel, Aluminium, HNBR		Aluminium, HNBR
9	**Body**	Aluminium die-casted		

Specifications are subject to change without prior notice and any obligation on the part of the manufacturer.

SMC CORPORATION Zuazobidea 14, 01012, Vitoria-Gasteiz, Álava +34 945184100 +34 945184126 www.smc.eu emcmarketing@smc.smces.es

Additional information

Catalogue	IR000A-Aa_EU.pdf
Installation manuals	IM_IRx000-A_SMW54EN.pdf
Operation manuals	OM_IR1000_DOC1072958EN-A.pdf OM_IRx_OMT0020EN.pdf OM_IR1200-A_OM00008EN-A.pdf

Specifications are subject to change without prior notice and any obligation on the part of the manufacturer.

SMC CORPORATION Zuazobidea 14, 01012, Vitoria-Gasteiz, Álava +34 945184100 +34 945184126 www.smc.eu emcmarketing@smc.smces.es