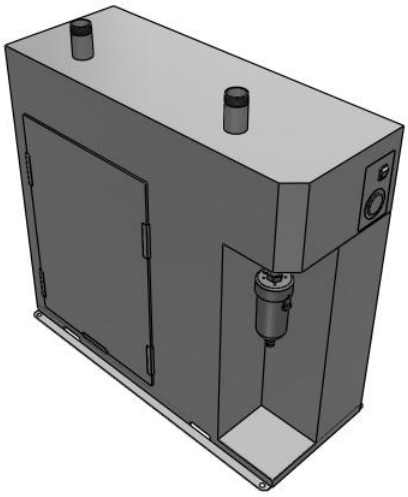

IDFA60/70/80/90, Refrigerated Air Dryer

IDFA70-23-F

Datasheet

General series information

- Air flow capacity up to 960 m³/h
- Ambient temperature: Max. 45 °C
- Inlet air temperature: Max. 65 °C
- Compliant with F-Gas regulation
- Power supply voltage: single-phase 230 VAC (50 Hz).

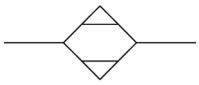

Dryer

Standard specifications

Size	70
Cool Compressed Air Output	None
Anti-corrosive Treatment	None
Refrigerant	F (Low GWP Refrigerant)
Chinese Labels and a Chinese Operation Manual	None
Medium Air Pressure	None
Earth Leakage Breaker	None
Terminal Block	None
Timer-type solenoid valve	None
Pressure medium	Compressed air
Maximum ambient temperature	45 °C
Maximum ambient temperature with magnet	2 °C (Relative humidity:85% or less)
Approvals	No need
Port size	R 1 1/2
Auto drain type	Float type (Normally open)
Inlet air temperature	5 to 65 ºC
Inlet air pressure	0.15 to 1.0 MPa
Power Consumption	1740

Specifications are subject to change without prior notice and any obligation on the part of the manufacturer.

SMC CORPORATION Zuazobidea 14, 01012, Vitoria-Gasteiz, Álava +34 945184100 +34 945184126 www.smc.eu emcmarketing@smc.smces.es

Power supply voltage (Frequency)	Single-phase 230 VAC (50 Hz)
Standard condition (ANR) Outlet air pressure dew point 3 ºC	312
Standard condition (ANR) Outlet air pressure dew point 7 ºC	408
Standard condition (ANR) Outlet air pressure dew point 10 ºC	480
Cooling method	Air-cooled refrigeration
Refrigerant	R454C (HFC)
Weight	73.000 Kg

Specifications are subject to change without prior notice and any obligation on the part of the manufacturer.

SMC CORPORATION Zuazobidea 14, 01012, Vitoria-Gasteiz, Álava +34 945184100 +34 945184126 www.smc.eu emcmarketing@smc.smces.es

Dimensions

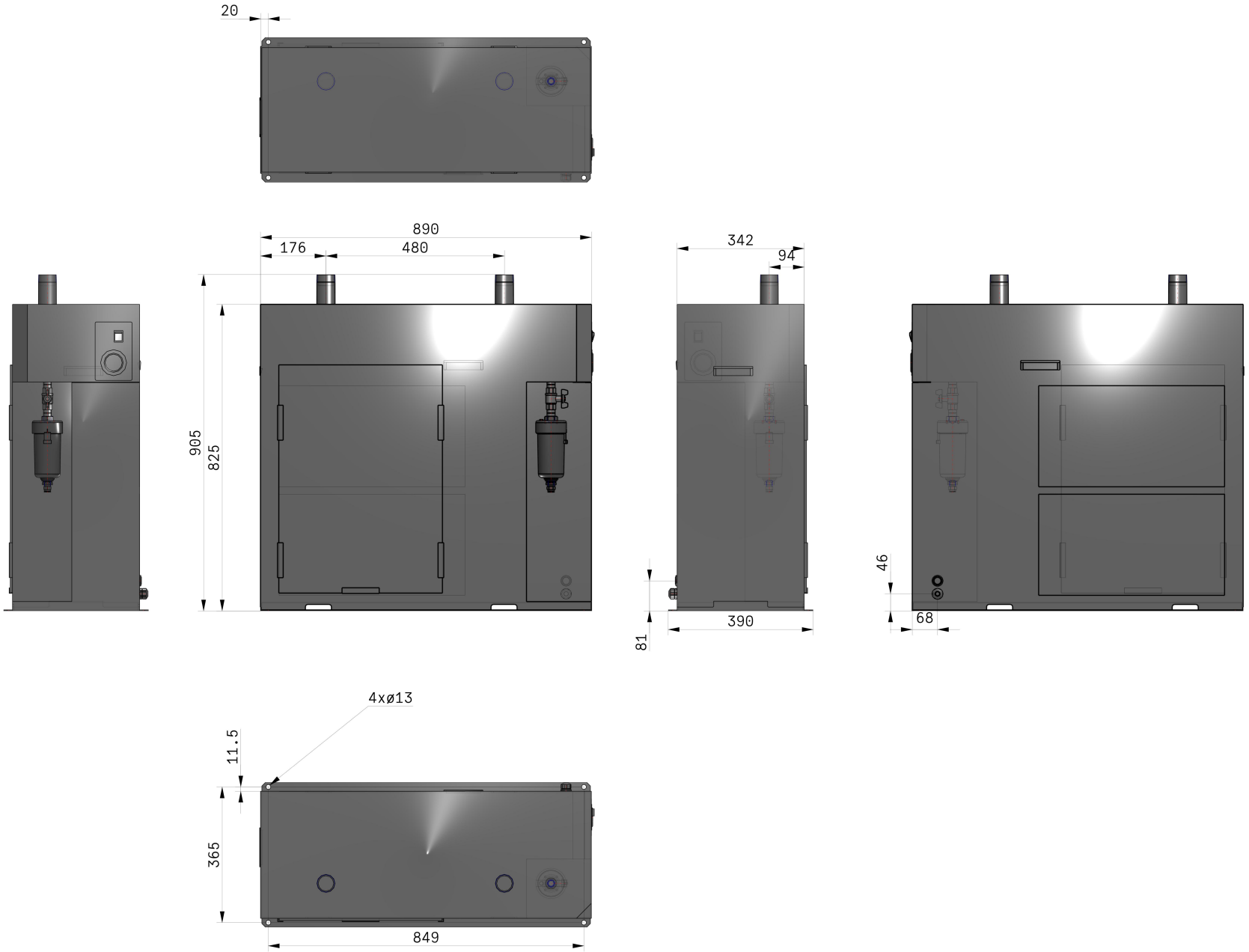

Specifications are subject to change without prior notice and any obligation on the part of the manufacturer.

SMC CORPORATION Zuazobidea 14, 01012, Vitoria-Gasteiz, Álava +34 945184100 +34 945184126 www.smc.eu emcmarketing@smc.smces.es

Additional information

Catalogue	IDFA-B_EU.pdf
Declaration of conformity	newDoC_IDF_IDFA_TF1V384EN.pdf newDoC_IDF_IDFA_TF1Y339EN.pdf
Operation manuals	OM_IDFAx-23_DOC1103000EN-1.pdf OM_IDFA_IDX-OM_V020EN-F.pdf

Specifications are subject to change without prior notice and any obligation on the part of the manufacturer.

SMC CORPORATION Zuazobidea 14, 01012, Vitoria-Gasteiz, Álava +34 945184100 +34 945184126 www.smc.eu emcmarketing@smc.smces.es