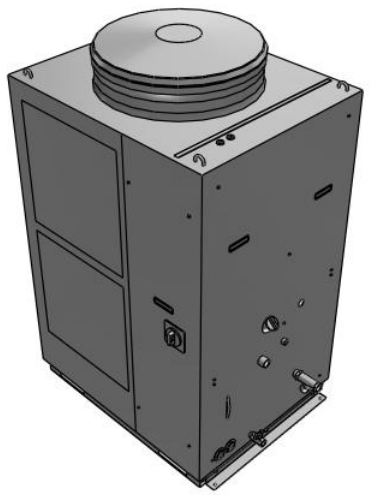

Large Type, Air-cooled 400 V Type - HRSH

HRSH300-A-40-K

Datasheet

General series information

- Cooling capacity: 10.5 to 28 kW
- Temperature stability: ±0.1 °C
- Set temperature range: 5 to 35 °C
- Triple inverter
- With heating function and self-diagnosis.

Standard specifications

Cooling Capacity	300 (28 kW)
Thread	Rc
Caster Adjuster-foot	None
Fluid Fill Port	K (w/Fluid Fill Port)
DI Water Piping	None
Maximum ambient temperature	45 °C
Minimum ambient temperature	-20 °C
Approvals	CE
Power supply	3-phase 380 to 415 V AC (50 / 60 Hz)
Cooling method	Air-cooled refrigeration
Refrigerant	R410A (HFC) (GWP2088)
Control method	PID control
Circulating fluid	Tap water, 15% ethylene glycol aqueous solution, Deionised water
Set temperature range	5 to 35 °C
Temperature stability	± 0,1
Tank capacity	60 L

Specifications are subject to change without prior notice and any obligation on the part of the manufacturer.

SMC CORPORATION Zuazobidea 14, 01012, Vitoria-Gasteiz, Álava +34 945184100 +34 945184126 www.smc.eu support.marketingeurope@smc.com

Contact material for circulating fluid	Stainless steel, Copper (Heat exchanger brazing), Brass (Y-strainer), PTFE, PU, FKM, EPDM, PVC, NBR, POM, PE, NR
Noise level (50 Hz)	68 dB
Circulating fluid port size	RC 1
Tank drain port	RC 3/4
Cooling capacity	28 kW
Heating capacity	7.5 kW
Pump rated flow	125 l/min (0.5 Mpa)
Pump maximum flow rate	180 l/min
Maximum pump head	80 m
Minimum operating flow rate	40 l/min
Rated operating current	18 A
Rated power consumption	10.8 kW
Automatic fluid fill system supply side pressure range	0.2 to 0.5 MPa
Automatic fluid fill system supply side fluid temperature	5 to 35 °C
Automatic fluid fill port	RC 1/2
Automatic fluid fill system overflow port	RC 1
Waterproof specification	IPX4
Weight	280.000 Kg

Specifications are subject to change without prior notice and any obligation on the part of the manufacturer.

SMC CORPORATION Zuazobidea 14, 01012, Vitoria-Gasteiz, Álava +34 945184100 +34 945184126 www.smc.eu support.marketingeurope@smc.com

Dimensions

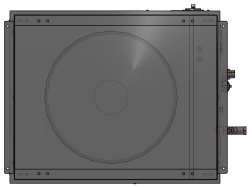

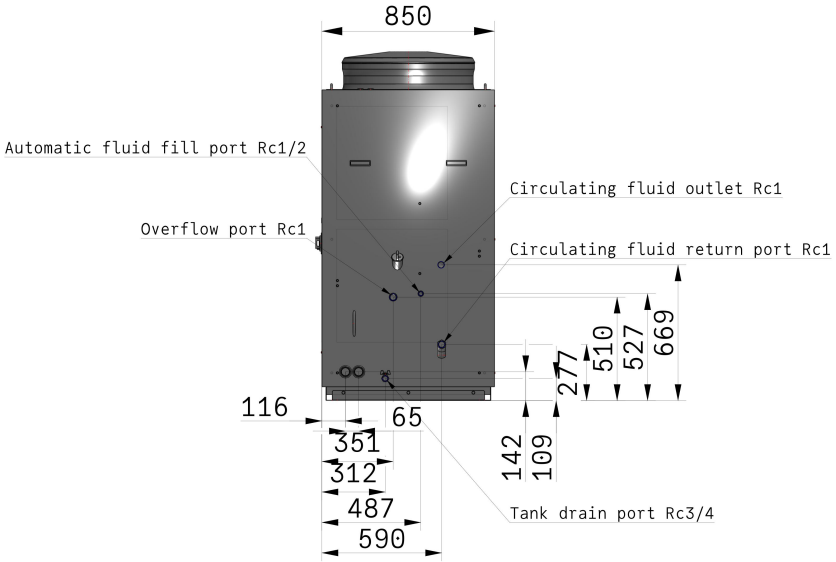

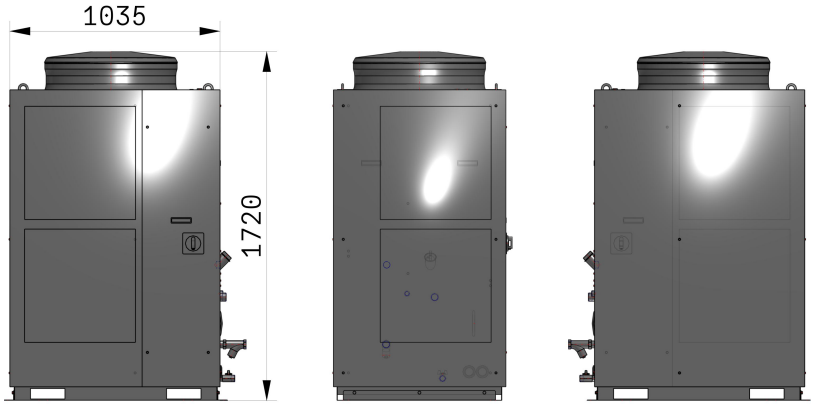

Specifications are subject to change without prior notice and any obligation on the part of the manufacturer.

SMC CORPORATION Zuazobidea 14, 01012, Vitoria-Gasteiz, Álava +34 945184100 +34 945184126 www.smc.eu support.marketingeurope@smc.com

Additional information

Catalogue	HRSH-Ddd_EU.pdf
Declaration of conformity	newDoC_HRSH_TF1Y300EN.pdf DoC_HRSH_TF-R020.pdf newDoC_HRSH_TF-T020EN.pdf newDoC_HRSH_TF1V338EN.pdf newDoC_HRSH_TF125-052EN.pdf
Installation manuals	IM_HRSH_TF2Z577EN-A.pdf
Operation manuals	OM_HRH100-250_EN-W.pdf OM-Snow_protection_hood_HRSH100-150-200-250-300_EN.pdf om-communication_hrsh100-150-200-250-300_en-e.pdf om-npt_thread_adapter_set_hrsh100-150-200-250-300_en-a.pdf OM-G_Thread_adapter_set_HRSH100-150-200-250-300_EN-A.pdf

Specifications are subject to change without prior notice and any obligation on the part of the manufacturer.

SMC CORPORATION Zuazobidea 14, 01012, Vitoria-Gasteiz, Álava +34 945184100 +34 945184126 www.smc.eu support.marketingeurope@smc.com