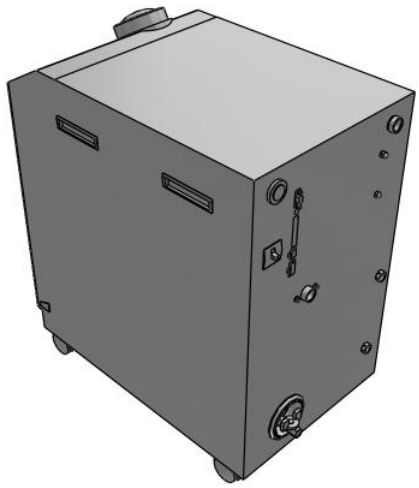

HRS, Thermo-chiller, Compact Type
HRS040-W-20-MT

Datasheet

General series information

- Compact and lightweight.
- Temperature stability ± 0.1 ºC.
- Improved maintenance performance.
- Heating function available even with no heater.

Standard specifications

Cooling Capacity	040 [Cooling capacity: 3800/4200 W (50/60 Hz)]
Cooling Method	W (Water-cooled Refrigeration)
Thread	Rc
Power Supply	20 [Single-phase 200 to 230 VAC (50/60 Hz)]
Earth Leakage Breaker	None
High ambient temperature	None
Automatic fluid fill	None
DI Water Piping	M (Applicable to Deionized Water Piping)
High-pressure pump	T (High-Lift Pump)
Units	None
Maximum ambient temperature	40 °C
Minimum ambient temperature	5 °C
Approvals	CE
Power supply	Single-phase 200 to 230 VAC (50/60 Hz)
Cooling method	Water-cooled refrigeration
Refrigerant	R410A (HFC)
Control method	PID control
Circulating fluid	Deionised water
Set temperature range	5 to 40 °C

Specifications are subject to change without prior notice and any obligation on the part of the manufacturer.

SMC CORPORATION Zuazobidea 14, 01012, Vitoria-Gasteiz, Álava +34 945184100 +34 945184126 www.smc.eu support.marketingeurope@smc.com

Cooling capacity (50 Hz)	3800
Heating capacity (50 Hz)	700
Temperature stability	± 0,1
Tank capacity	5 L
Contact material for circulating fluid	Stainless steel (including heat exchanger brazing), Alumina ceramic, SiC, Carbon, PP, PE, POM, FKM, NBR, EPDM, PVC
Facility water temperature range	5 to 40 °C
Facility water pressure range	0.3 to 0.5 MPa
Facility water requiered flow range (50 Hz)	15 l/min
Facility water port size	3/8
Contact material for facility water	Stainless steel, Copper (Heat exchanger brazing), Bronze, Synthetic rubber
Rated operating current (50 Hz)	6.9 A
Rated power consumption (50 Hz)	1.5 kVA
Pump rated flow (50 Hz)	10 l/min (0.32 MPa)
Pump maximum flow rate (50 Hz)	18 l/min
Maximum pump head (50 Hz)	60 m
Circulating fluid port size	1/2
Noise level	64 dB
Weight	59.000 Kg

Specifications are subject to change without prior notice and any obligation on the part of the manufacturer.

SMC CORPORATION Zuazobidea 14, 01012, Vitoria-Gasteiz, Álava +34 945184100 +34 945184126 www.smc.eu support.marketingeurope@smc.com

Dimensions

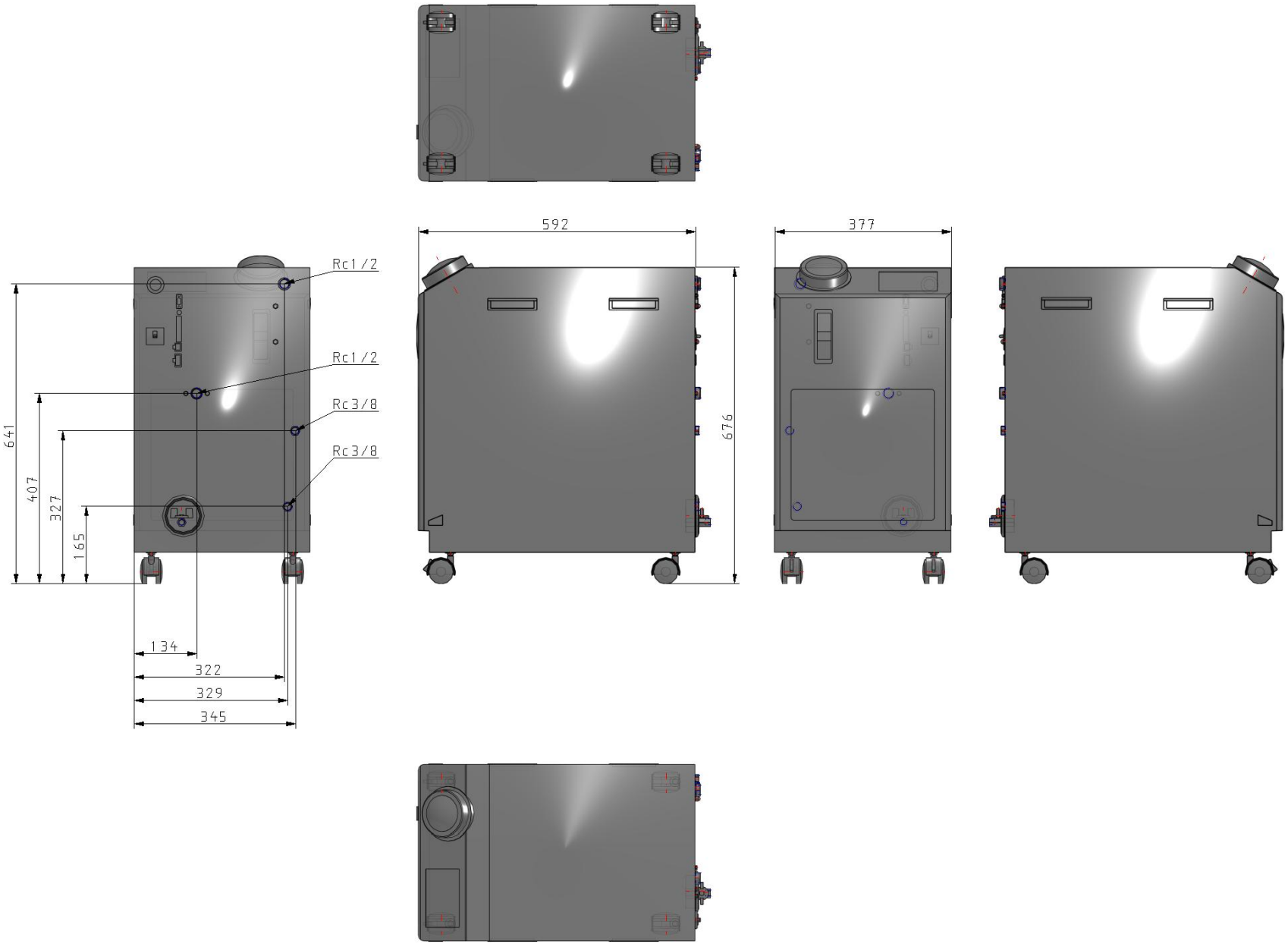

Specifications are subject to change without prior notice and any obligation on the part of the manufacturer.

SMC CORPORATION Zuazobidea 14, 01012, Vitoria-Gasteiz, Álava +34 945184100 +34 945184126 www.smc.eu support.marketingeurope@smc.com

Additional information

Catalogue	HRS-G_EU.pdf
Declaration of conformity	newDoC_HRS_TF125-047EN.pdf newDoC_HRS_TF-T018EN.pdf DoC_HRS_TF-S043.pdf newDoC_HRS_TF1V336EN.pdf DoC_HRSx_TF-O027.pdf newDoC_HRS_TF1Y298EN-D.pdf
Installation manuals	IM_HRS040_SMX145EN-A.pdf IMM_HRS_TFR02EN-A.pdf IM_HRSF012_018_024_030_050_060_TF224-064EN-B.pdf
Operation manuals	OM_DI-filter-set_HRS012-018-024_EN.pdf OM_HRSF_DOC1093921EN.pdf OM_HRSF_DOC1053240EN-1.pdf OM_HRS040_EN-F.pdf OM_Bypass-piping-set_HRS012-018-024_EN.pdf OM_HRS060_EN-N.pdf OM_HRS030_EN-O.pdf OM_HRS12-018-024_OM-M090EN-H.pdf OM_HRSF_DOC1053228EN-2.pdf OM_HRS050_EN-V.pdf OM-Communication_HRS012-018-024-030-040-050-060_EN-P.pdf QuickManual_HRS_M085EN-F.pdf

Specifications are subject to change without prior notice and any obligation on the part of the manufacturer.

SMC CORPORATION Zuazobidea 14, 01012, Vitoria-Gasteiz, Álava +34 945184100 +34 945184126 www.smc.eu support.marketingeurope@smc.com