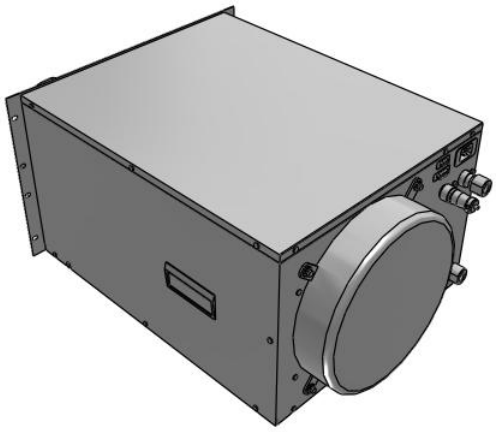

Circulating Fluid Temperature Controller, Rack Mount Type, 230VAC - HRR

HRR012-AF-20-U

Datasheet

General series information

- Cooling capacity: 0.95 to 5 kW (50 Hz)
- Temperature stability: ±0.1°C
- Set temperature range: 5 to 35 °C; 15 to 35 °C (HRR010)
- Space Saving
- With heating function and self-diagnosis.

Standard specifications

Cooling Capacity	012 [1000/1200, (50/60 Hz)]
Cooling Method	A (Air-cooled)
Pipe Thread	F (G, w/Rc-G Conversion Fitting)
Power Supply	20 [Single-phase 200 to 230 VAC (50/60 Hz)]
DI Water Piping	None
High-pressure Pump Mounted	None
Suffix	U (Conforming to UL Standards)
Feet	None
Flow Sensor	None
Maximum ambient temperature	40 ºC
Minimum ambient temperature	5 ºC
Approvals	CE
Power supply	Single-phase 200 to 230 VAC (50/60 Hz)
Port size	G 1/2
Cooling method	Air-cooled refrigeration
Refrigerant	R410A (HFC)
Control method	PID control
Circulating fluid	Tap water, 15% ethylene glycol aqueous solution

Specifications are subject to change without prior notice and any obligation on the part of the manufacturer.

SMC CORPORATION Zuazobidea 14, 01012, Vitoria-Gasteiz, Álava +34 945184100 +34 945184126 www.smc.eu support.marketingeurope@smc.com

Set temperature range	5 - 35 °C
Cooling capacity (50 Hz)	1000 W
Heating capacity (50 Hz)	450 W
Temperature stability	± 0.1 °C
Tank capacity	4 L
Contact material for circulating fluid	Stainless steel, Copper (Heat exchanger brazing), Brass, SiC, Alumina ceramic, Carbon, PP, PE, POM, PA, FKM, EPDM, PVC, PPS, AS, Fluoropolymer, Ion exchange resin
Noise level (50 Hz)	59 dB
Rated power consumption (50 Hz)	0.6 kW
Pump rated flow (50 Hz)	7 l/min
Circulating fluid port size	G 1/2
Tank drain port	G 1/4
Weight	40.000 Kg

Specifications are subject to change without prior notice and any obligation on the part of the manufacturer.

SMC CORPORATION Zuazobidea 14, 01012, Vitoria-Gasteiz, Álava +34 945184100 +34 945184126 www.smc.eu support.marketingeurope@smc.com

Dimensions

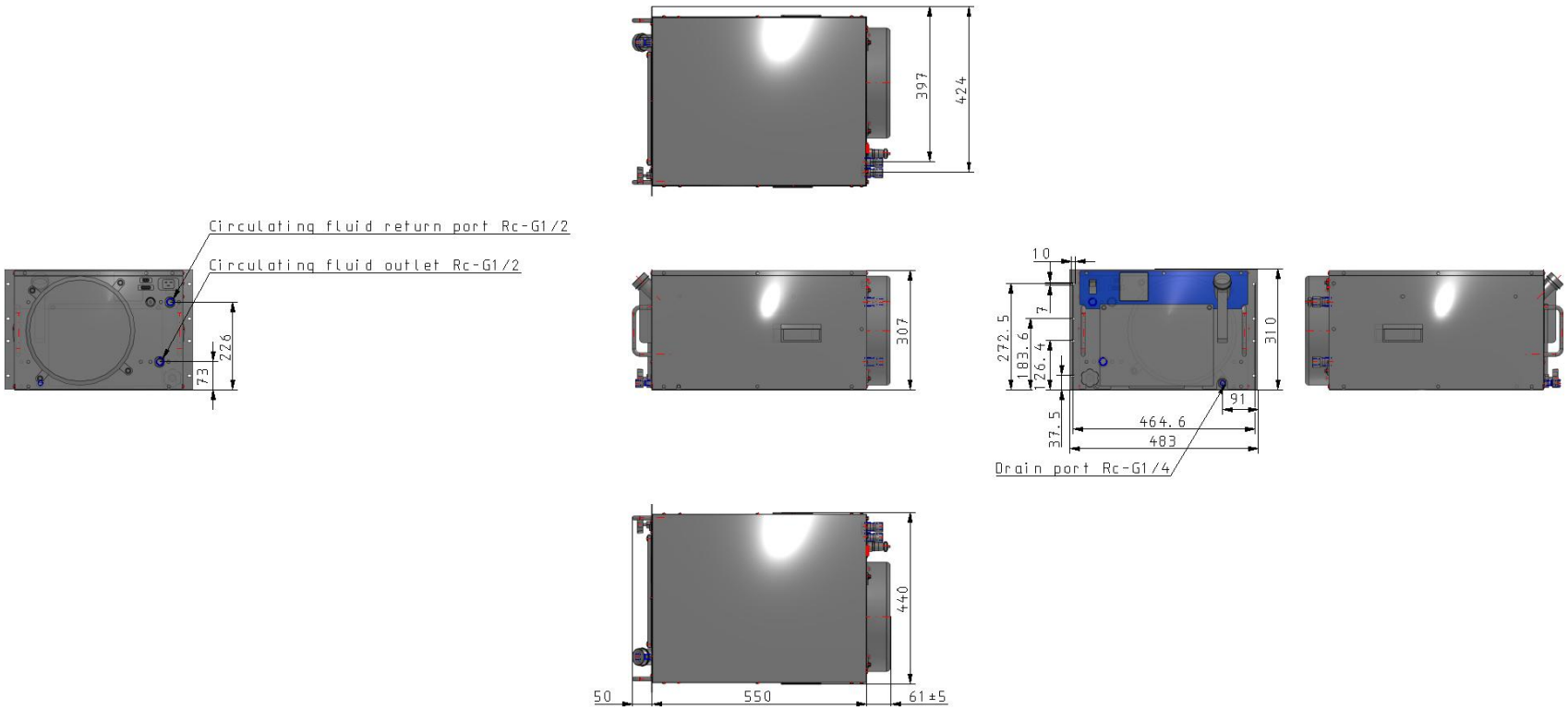

Specifications are subject to change without prior notice and any obligation on the part of the manufacturer.

SMC CORPORATION Zuazobidea 14, 01012, Vitoria-Gasteiz, Álava +34 945184100 +34 945184126 www.smc.eu support.marketingeurope@smc.com

Additional information

Catalogue	HRR-D_EU.pdf
Declaration of conformity	newDoC_HRR_TF1W10EN.pdf newDoC_HRR_TF125-045EN.pdf newDoC_HRR-TF1Y309EN-B.pdf
Installation manuals	IM_HRR_SMW56EN-C.pdf IM_HRR050_SMY61EN-B.pdf IM_HRR010_SMY36EN-B.pdf
Operation manuals	OM_HRR_OM-Y057EN-A.pdf OM_HRR50_OM-X071EN-G.pdf OM_HRR_W004EN-I.pdf OM_HRRx_OM-W002EN-N.pdf OM_HRR010_EN-E.pdf OM_HRR_OM-X084EN-I.pdf

Specifications are subject to change without prior notice and any obligation on the part of the manufacturer.

SMC CORPORATION Zuazobidea 14, 01012, Vitoria-Gasteiz, Álava +34 945184100 +34 945184126 www.smc.eu support.marketingeurope@smc.com