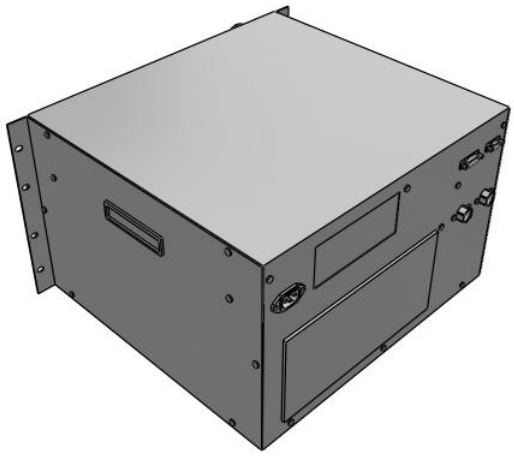

Rack Mount Type, Air-cooled - HECR-A

HECR010-A2-FP

Datasheet

General series information

- Cooling capacity: 0.2 to 1 kW
- Temperature stability: ±0.01 °C to ±0.03 °C
- Set temperature range: 10 to 60 °C
- Space-saving
- With heating function and self-diagnosis.

Standard specifications

Cooling Capacity	010 (1 kW)
Power Supply	A2 (200 to 240 VAC)
Pipe Thread	Rc
Feet	None
Flow switch	F (w/Flow Switch)
High-pressure pump	P (High Pressure Pump Mounted)
Maximum ambient temperature	35 °C
Minimum ambient temperature	10 °C
Approvals	CE
Power supply	Single-phase 200 to 240 VAC ±10 %, 50/60 Hz
Current consumption	8 A (200 V)
Port size	Rc3/8
Power Consumption	1500 W
Cooling method	Air-cooled refrigeration
Control method	Cooling/Heating automatic shift PID control
Circulating fluid	Tap water, Ethylene glycol 20%
Set temperature range	10 to 60 °C
Cooling capacity (50 Hz)	1000 W

Specifications are subject to change without prior notice and any obligation on the part of the manufacturer.

SMC CORPORATION Zuazobidea 14, 01012, Vitoria-Gasteiz, Álava +34 945184100 +34 945184126 www.smc.eu emcmarketing@smc.smces.es

Heating capacity (50 Hz)	2000 W
Temperature stability	± 0.01 to 0.03 °C
Tank capacity	1.3 L
Contact material for circulating fluid	Stainless steel, EPDM, NBR, Ceramics, PPE, PPS, Carbon, PP, PE, Nylon, POM (HECR008, 010), PVC (High pressure)
Circulating fluid port size	RC 3/8
Weight	33.000 Kg

Specifications are subject to change without prior notice and any obligation on the part of the manufacturer.

SMC CORPORATION Zuazobidea 14, 01012, Vitoria-Gasteiz, Álava +34 945184100 +34 945184126 www.smc.eu emcmarketing@smc.smces.es

Dimensions

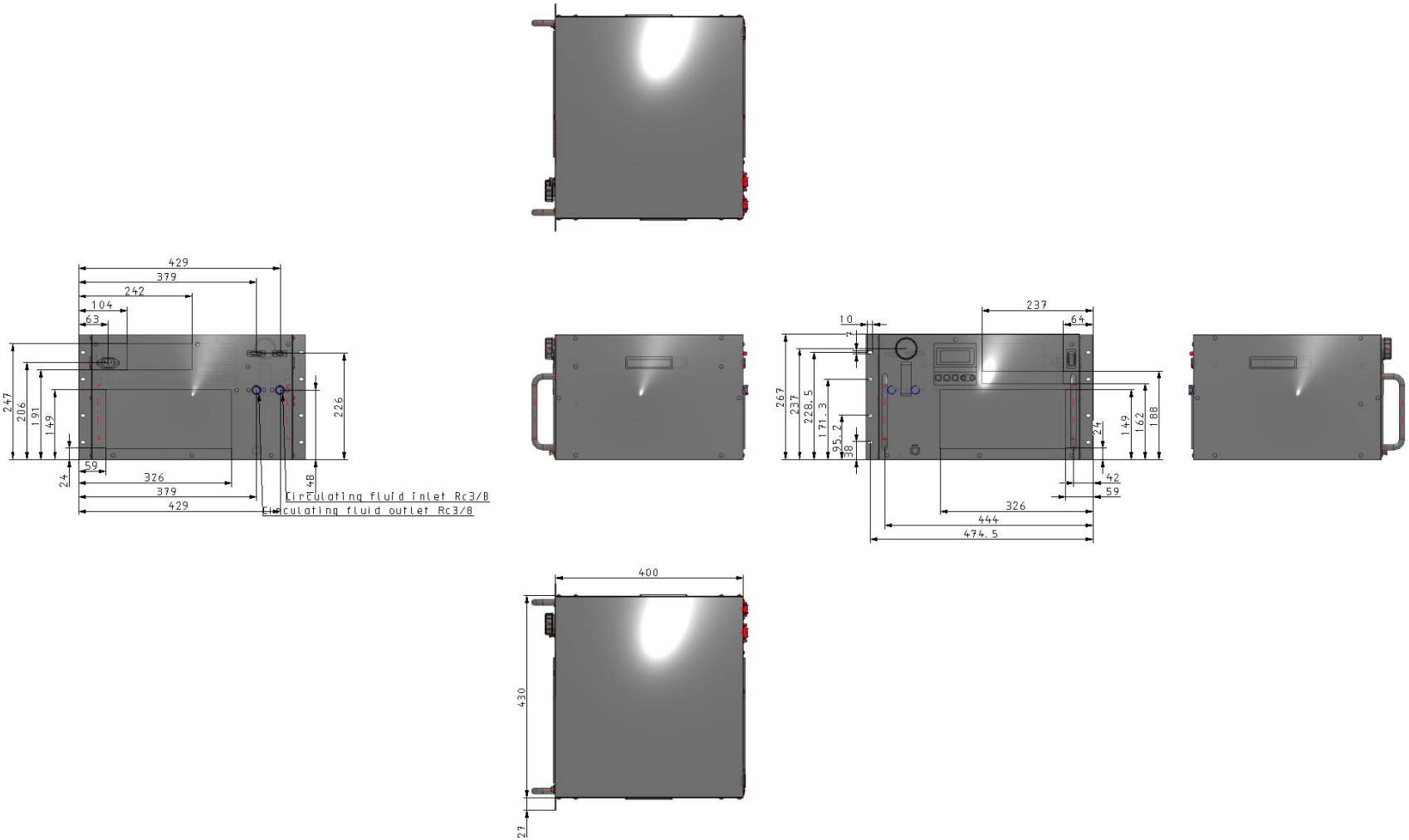

Specifications are subject to change without prior notice and any obligation on the part of the manufacturer.

SMC CORPORATION Zuazobidea 14, 01012, Vitoria-Gasteiz, Álava +34 945184100 +34 945184126 www.smc.eu emcmarketing@smc.smces.es

Additional information

Catalogue	HECR-Dd_EU.pdf
Declaration of conformity	newDoC_HECR_TF1Y323EN.pdf newDoC_HECR_TF-T008EN.pdf DoC_HECR010_TF-S014.pdf newDoC_HECR_TF1V279EN-A.pdf newDoC_HECR_TF123-087EN.pdf
Installation manuals	IM_HECR_TFS46EN-A.pdf
Operation manuals	OM_HECR002-004-006-008-010EN-I.pdf OM_Communication_HECR_S008EN.pdf

Specifications are subject to change without prior notice and any obligation on the part of the manufacturer.

SMC CORPORATION Zuazobidea 14, 01012, Vitoria-Gasteiz, Álava +34 945184100 +34 945184126 www.smc.eu emcmarketing@smc.smces.es