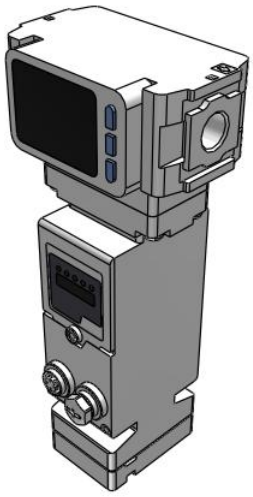

Air Management Hub – EXA1
EXA1-30-EN-KL

Datasheet

General series information

- Compatible with Ethernet, Profinet and EtherCAT
- Wireless base or remote function
- IO-link compatible.

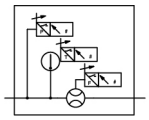

Air management hub

Standard specifications

Body Size	30
Protocol	EN [EtherNet/IP™, OPC UA (When Wireless Adapter is Connected: Wireless Base)]
Units	K (Units Selection Function)
Pressure medium	Air
Maximum temperature of pressure medium	50 °C
Minimum temperature of pressure medium	0 °C
Proof pressure	1.5 MPa
Maximum ambient temperature	50 °C
Minimum ambient temperature	0 °C
General power supply	24 VDC ±10 %
Conform to the European RoHS Directive	Conform
Approvals	CE, UKCA
Protection class without connector	IP65
Output type	PNP
Current consumption	400 mA
Repeatability	Flow: ±1.0 % F.S. Pressure: ±1.0 % F.S.
Rated pressure range	0 - 1.0 MPa
Max. Flow rate (l/min (ANR))	1000 l/min
Accuracy	Flow: ±3.0 % F.S. Pressure: ±3.0 % F.S. Temperature: ±2.5 °C (Flow range:10 % to 100 %)

Specifications are subject to change without prior notice and any obligation on the part of the manufacturer.

SMC CORPORATION Zuazobidea 14, 01012, Vitoria-Gasteiz, Álava +34 945184100 +34 945184126 www.smc.eu support.marketingeurope@smc.com

Indicator light	LED & LCD
Temperature characteristics	Flow: ±5.0 % F.S. (0 to 50 °C, 25 °C standard) Pressure: ±5.0 % F.S. (0 to 50 °C, 25 °C standard)
Smallest settable increment Accumulated flow	10 l
Pressure characteristics	±5.0 % F.S. (0 to 1.0 MPa, 0.5 MPa standard)
Electrical protection	Polarity protection, Over current protection
Accumulated flow range	0 - 9,999,999,990 l
F467 - Input type	PNP
settable_increment_inst	1 l/min
Weight	0.770 Kg

Specifications are subject to change without prior notice and any obligation on the part of the manufacturer.

SMC CORPORATION Zuazobidea 14, 01012, Vitoria-Gasteiz, Álava +34 945184100 +34 945184126 www.smc.eu support.marketingeurope@smc.com

Dimensions

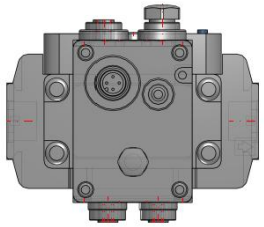

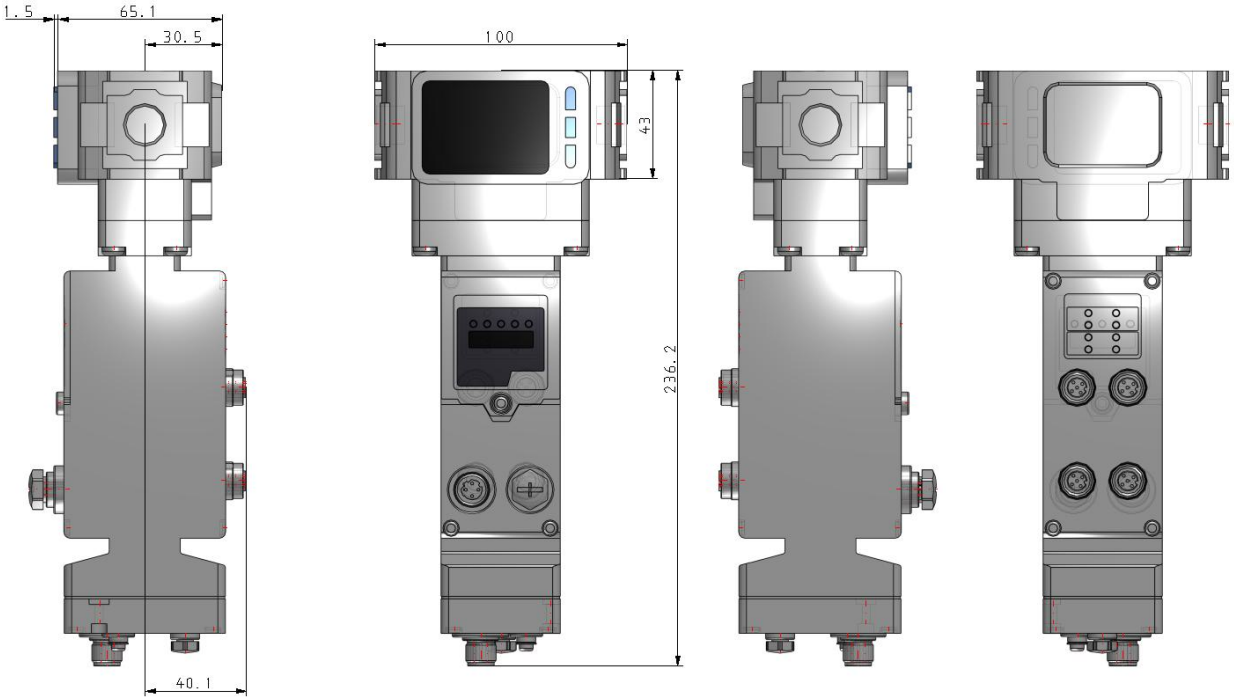

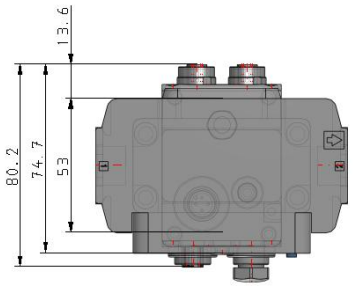

Specifications are subject to change without prior notice and any obligation on the part of the manufacturer.

SMC CORPORATION Zuazobidea 14, 01012, Vitoria-Gasteiz, Álava +34 945184100 +34 945184126 www.smc.eu support.marketingeurope@smc.com

Additional information

Catalogue	AMS-Da_EU.pdf
Declaration of conformity	newDoC_AMS20-30-40-60_TF125-177EN.pdf
Installation manuals	IM_AMS_TF223-005EN-A.pdf IM_EXA1_TF222-139EN-B.pdf IM_EXW1-A11N-X1_TF222-092EN-A.pdf
Operation manuals	OM_AMS_20-30-40-60_OMA1007EN-G.pdf

Specifications are subject to change without prior notice and any obligation on the part of the manufacturer.

SMC CORPORATION Zuazobidea 14, 01012, Vitoria-Gasteiz, Álava +34 945184100 +34 945184126 www.smc.eu support.marketingeurope@smc.com