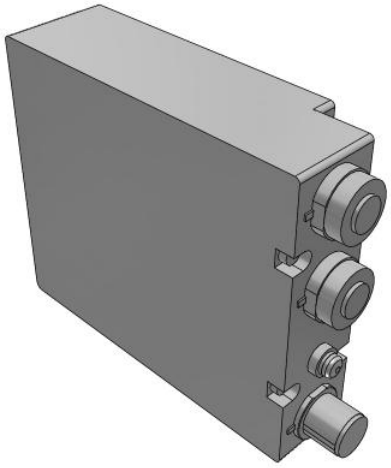

EX260, Integrated Type (For Output) Serial Transmission System

EX260-SEN1

Datasheet

General series information

- Centralised & compact serial transmission system for output
- Compatible protocols: PROFIsafe, Ethernet POWERLINK, PROFINET, EtherNet/IP™, EtherCAT®, PROFIBUS DP, DeviceNet™, CC-Link, IO-Link, CANopen, Modbus, AS-Interface
- Up to 32 solenoids, up to 24 stations
- Applicable valve series: new SY, VQC, S0700, SV
- Up to IP67 enclosure compliant.

Standard specifications

Protocol/Number of outputs/Output Polarity/Communication Connector	EN1 [EtherNet/IP™ / 32 / -COM (PNP) / M12]
Maximum ambient temperature	50 °C
Minimum ambient temperature	–10 °C
General power supply	24 VDC
Approvals	CE marking, UL (CSA) compatible
Type of electrical connector	M12
Version	Volume 1 (Edition 3.17), Volume 2 (Edition 1.18)
Number of outputs	32
SI unit output polarity	Source/PNP (Negative common)
Communication speed	10 M/100 Mbps
Enclosure	IP67
Weight	0.200 Kg

Specifications are subject to change without prior notice and any obligation on the part of the manufacturer.

SMC United Kingdom +34 945184126 sales@smc.uk

Dimensions

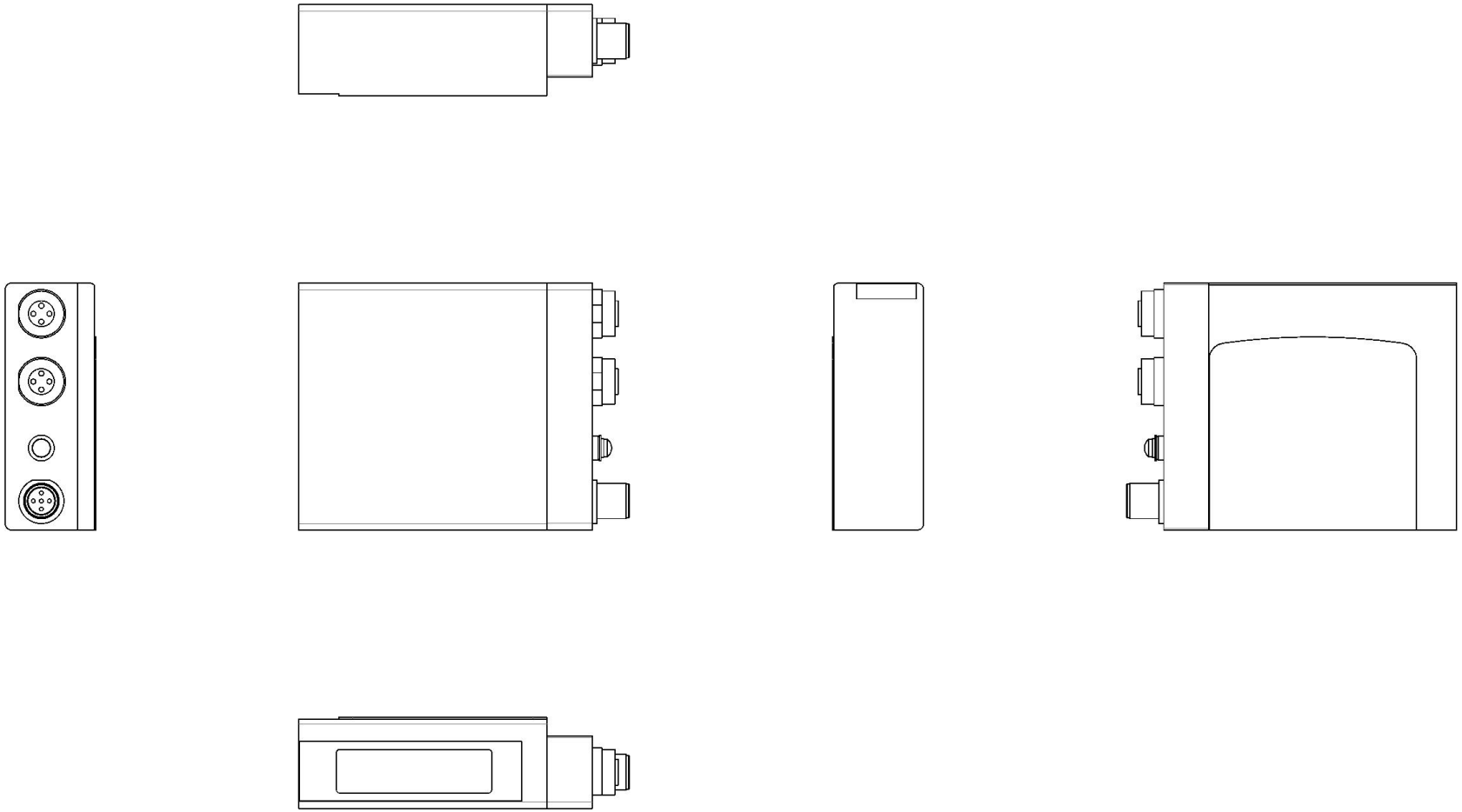

Specifications are subject to change without prior notice and any obligation on the part of the manufacturer.

SMC United Kingdom +34 945184126 sales@smc.uk

Additional information

Catalogue	EX260-E_EU.pdf
Declaration of conformity	newDoC_EX260_PROFIsafe_EN-C.pdf newDoC_EX260_PROFIBUS_DeviceNet_EtherCAT_PROFINET_EtherNetIP_EtherNet-POWERLINK_CC-Link_EN-A.pdf newDoC_EX260-S_M_V_P_TF124-174EN.pdf
Installation manuals	IM_EX260_EtherNet_POWERLINK_EN.pdf IM_EX260_DeviceNet_EN.pdf IM_EX260_CC-Link_EN.pdf IM_EX260_PROFINET_EN.pdf IM_EX260-SPR_PROFIBUS_EN.pdf IM_EX260_IO-Link_EN.pdf IM_EX260_EtherNetIP_EN.pdf IM_EX260_PROFIsafe_EN.pdf IM_EX260_EtherCAT_EN.pdf
Operation manuals	OM_EX260_PROFIBUS_EN-H.pdf OM_EX260_IP_Address_Setting_Tool_EX9-ZSW-IPC1_EN-A.pdf OM_EX260_PROFINET_EN-F.pdf OM_EX260-IO-Link_EN-B.pdf OM_EX260-SDN_DeviceNet_EN-J.pdf OM_EX260_EtherNet_POWERLINK_EN-B.pdf OM_EX260_PROFIsafe_EN-A.pdf OM_EX260-SEN_EtherNetip_EN-G.pdf OM_EX260_IP_Address_Setting_Tool_EX9-ZSW-IPC2_EN-A.pdf OM_EX260-SEC_EtherCAT_EN-G.pdf OM_EX260-CC-Link_EN-J.pdf

Specifications are subject to change without prior notice and any obligation on the part of the manufacturer.

SMC United Kingdom +34 945184126 sales@smc.uk