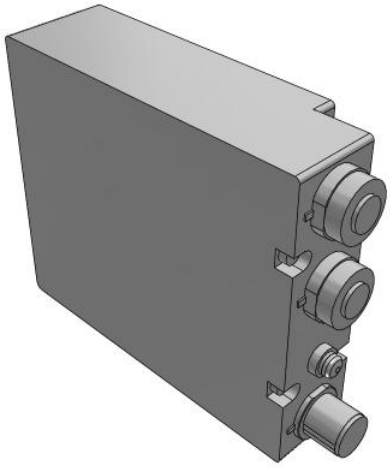

EX260, Integrated Type (For Output) Serial Transmission System

EX260-SEC1

Datasheet

General series information

- Centralised & compact serial transmission system for output
- Compatible protocols: PROFIsafe, Ethernet POWERLINK, PROFINET, EtherNet/IP™, EtherCAT®, PROFIBUS DP, DeviceNet™, CC-Link, IO-Link, CANopen, Modbus, AS-Interface
- Up to 32 solenoids, up to 24 stations
- Applicable valve series: new SY, VQC, S0700, SV
- Up to IP67 enclosure compliant.

Standard specifications

Protocol/Number of outputs/Output Polarity/Communication Connector	EC1 [EtherCAT / 32 / -COM (PNP) / M12]
Maximum ambient temperature	50 °C
Minimum ambient temperature	–10 °C
General power supply	24 VDC
Approvals	CE marking, UL (CSA) compatible
Type of electrical connector	M12
Version	Conformance Test Record V.1.1
Number of outputs	32
SI unit output polarity	Source/PNP (Negative common)
Communication speed	100 Mbps
Enclosure	IP67
Weight	0.200 Kg

Specifications are subject to change without prior notice and any obligation on the part of the manufacturer.

SMC United Kingdom +34 945184126 sales@smc.uk

Dimensions

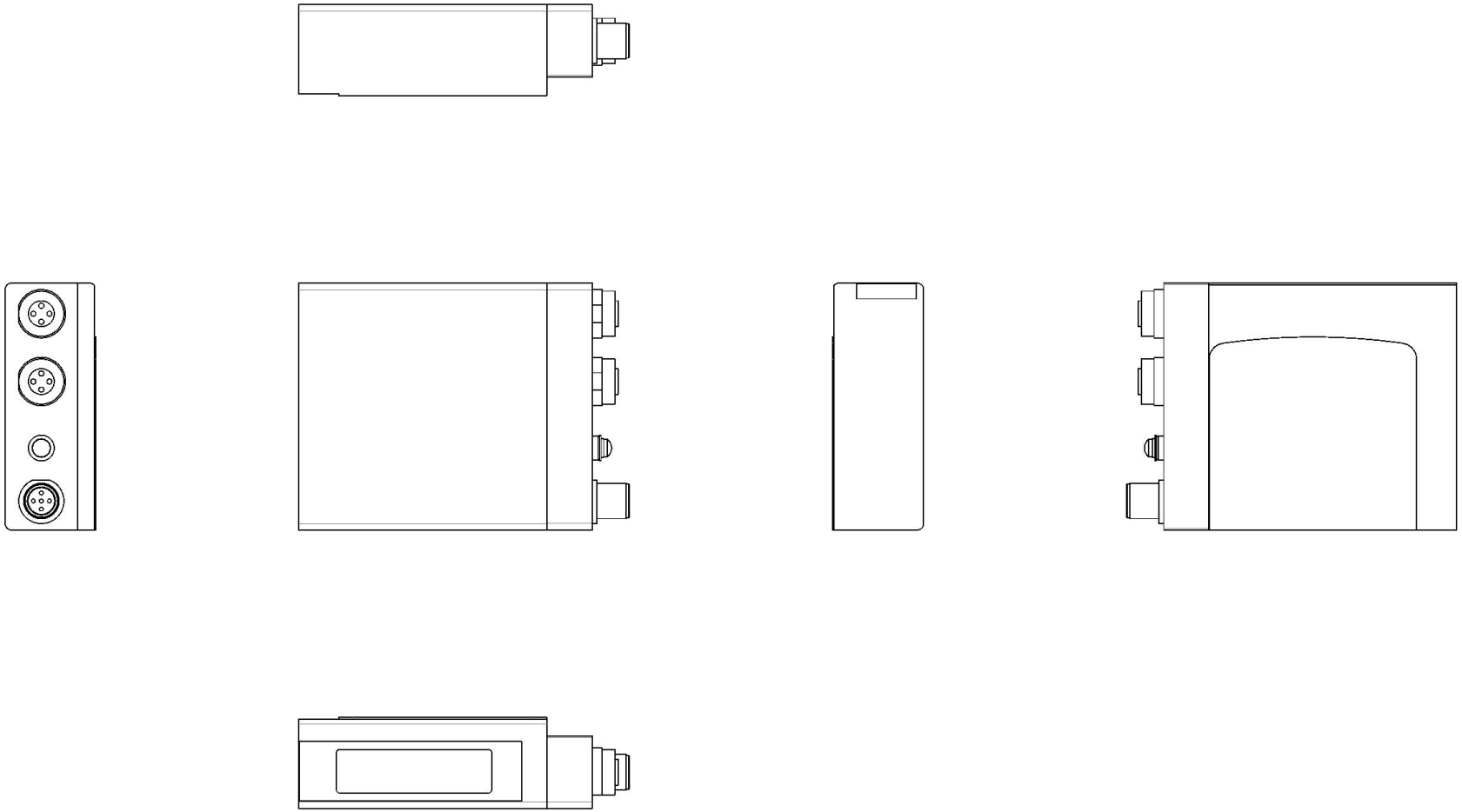

Specifications are subject to change without prior notice and any obligation on the part of the manufacturer.

Additional information

Catalogue	EX260-E_EU.pdf
Declaration of conformity	newDoC_EX260_PROFIsafe_EN-C.pdf newDoC_EX260_PROFIBUS_DeviceNet_EtherCAT_PROFINET_EtherNetIP_EtherNet-POWERLINK_CC-Link_EN-A.pdf newDoC_EX260-S_M_V_P_TF124-174EN.pdf
Installation manuals	IM_EX260_DeviceNet_EN-A.pdf IM_EX260_PROFINET_EN-A.pdf IM_EX260_EtherCAT_EN-A.pdf IM_EX260_EtherNet_POWERLINK_EN-A.pdf IM_EX260_IO-Link_EN-A.pdf IM_EX260_CC-Link_EN-A.pdf IM_EX260_EtherNetIP_EN-A.pdf IM_EX260-SPR_PROFIBUS_EN-A.pdf IM_EX260_PROFIsafe_EN-A.pdf
Operation manuals	OM_EX260_PROFIBUS_EN-H.pdf OM_EX260_IP_Address_Setting_Tool_EX9-ZSW-IPC1_EN-A.pdf OM_EX260_PROFINET_EN-F.pdf OM_EX260-IO-Link_EN-B.pdf OM_EX260-SDN_DeviceNet_EN-J.pdf OM_EX260_EtherNet_POWERLINK_EN-B.pdf OM_EX260_PROFIsafe_EN-A.pdf OM_EX260-SEN_EtherNetip_EN-G.pdf OM_EX260_IP_Address_Setting_Tool_EX9-ZSW-IPC2_EN-A.pdf OM_EX260-SEC_EtherCAT_EN-G.pdf OM_EX260-CC-Link_EN-J.pdf

Specifications are subject to change without prior notice and any obligation on the part of the manufacturer.

SMC United Kingdom +34 945184126 sales@smc.uk