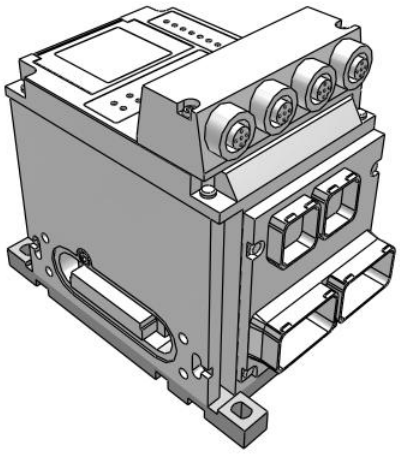

EX245, SI Unit, Compact
EX245-FPS2

Datasheet

General series information

- AIDA specifications compliant.
- Compatible with PROFIsafe
- Compatible protocol PROFINET.
- Push Pull, M12 connectors.
- Max. 32 valves.
- Max. 128 inputs; Max. 64 outputs.
- Applicable valve series: JSY3000, JSY5000, SY3000, SY5000, VQC2000, VQC4000.

Standard specifications

Protocol	FPS (PROFIsafe)
Connector Type	2 [Communication Connector: Push Pull Connector (RJ45): 2 pcs.; Power Supply Connector: Push Pull Connector (24 V): 2 pcs.]
Weight	1.100 Kg

Specifications are subject to change without prior notice and any obligation on the part of the manufacturer.

SMC CORPORATION Zuazobidea 14, 01012, Vitoria-Gasteiz, Álava +34 945184100 +34 945184126 www.smc.eu support.marketingeurope@smc.com

Dimensions

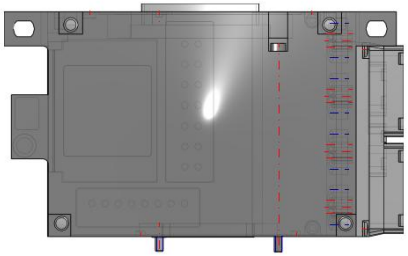

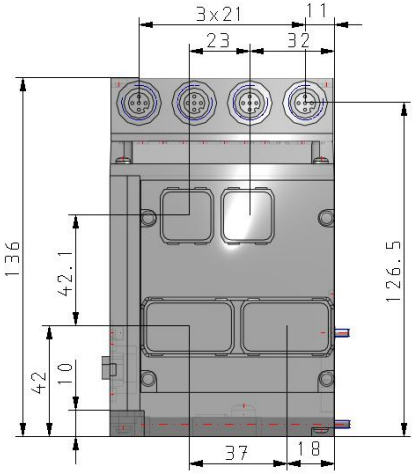

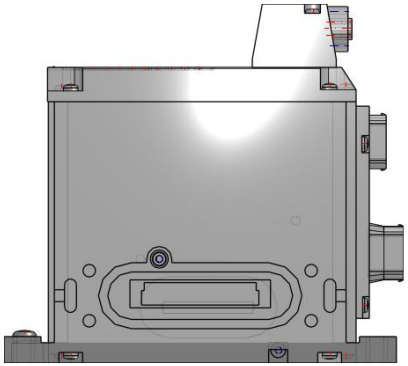

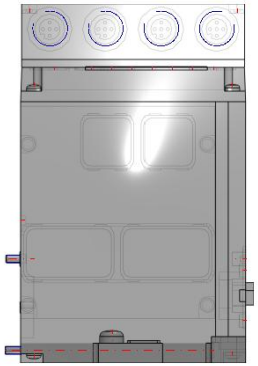

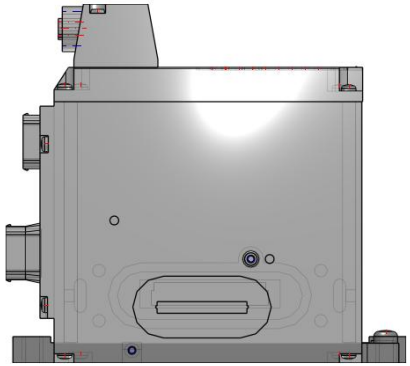

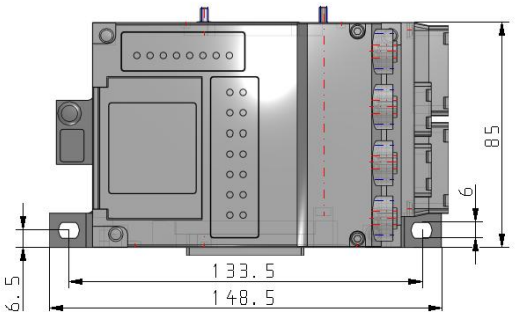

Specifications are subject to change without prior notice and any obligation on the part of the manufacturer.

SMC CORPORATION Zuazobidea 14, 01012, Vitoria-Gasteiz, Álava +34 945184100 +34 945184126 www.smc.eu support.marketingeurope@smc.com

Additional information

Catalogue	EX245-B_EU.pdf
Declaration of conformity	newDoc_EX245_TF1V132EN-A.pdf.pdf newDoC_EX245-FPS_TF1Y095EN-C.pdf newDoC_EX245_TF1Y094EN.pdf
Installation manuals	IM_EX245-SPN_TF2Z184EN-A.pdf IM_EX245-FPS_TF2Z442EN.A.pdf IM_EX245-SPN_TF2Z191EN-A.pdf
Operation manuals	OM-EX245-FPS_OMY0004EN.pdf OM_EX24-FPS_OMZ0002EN-A.pdf OM_EX245-SPN_OMW0011EN-C.pdf OM_EX245_OMU0020EN.pdf

Specifications are subject to change without prior notice and any obligation on the part of the manufacturer.

SMC CORPORATION Zuazobidea 14, 01012, Vitoria-Gasteiz, Álava +34 945184100 +34 945184126 www.smc.eu support.marketingeurope@smc.com