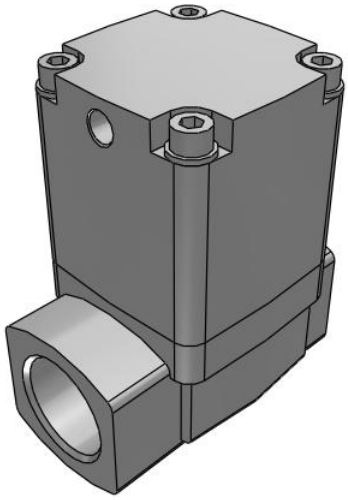

VNB (Air Operated), Process Valve for Flow Control

EVNB401BS-F25A

Datasheet

General series information

- Process valve series VNB
- Air operated type
- Orifice size: 7mm to 50mm
- Port size: 1/8 to 2 Rc(PT)
- Seal material: NBR, FKM, EPR

Standard specifications

Area Code	E (Europe)
Size	4 [ø25 (N.C. 0.5 MPa/N.O. 1 MPa/C.O. 1 MPa), ø16 (N.C. 1 MPa)]
Valve Type	1 [NC (Operating Pressure 05 MPa)]
Sealant	B (FKM Seal)
Body Material	S (Stainless Steel Body)
Pilot System Option	Standard
Thread	F (G(PF))
Port Size	25A (1)
Bracket	None
Maximum temperature of pressure medium	99 ºC
Minimum temperature of pressure medium	-5 ºC
Proof pressure	1.5 MPa
Maximum ambient temperature	60 ºC
Minimum ambient temperature	-5 ºC
Pressure range	Low vacuum to 0.5 MPa
External pilot air: Press.	0.25 - 0.7 MPa
External pilot air: Temperature	-5 ºC - 60 ºC

Specifications are subject to change without prior notice and any obligation on the part of the manufacturer.

SMC United Kingdom +34 945184126 sales@smc.uk

Weight	1.400 Kg

Specifications are subject to change without prior notice and any obligation on the part of the manufacturer.

SMC United Kingdom +34 945184126 sales@smc.uk

Dimensions

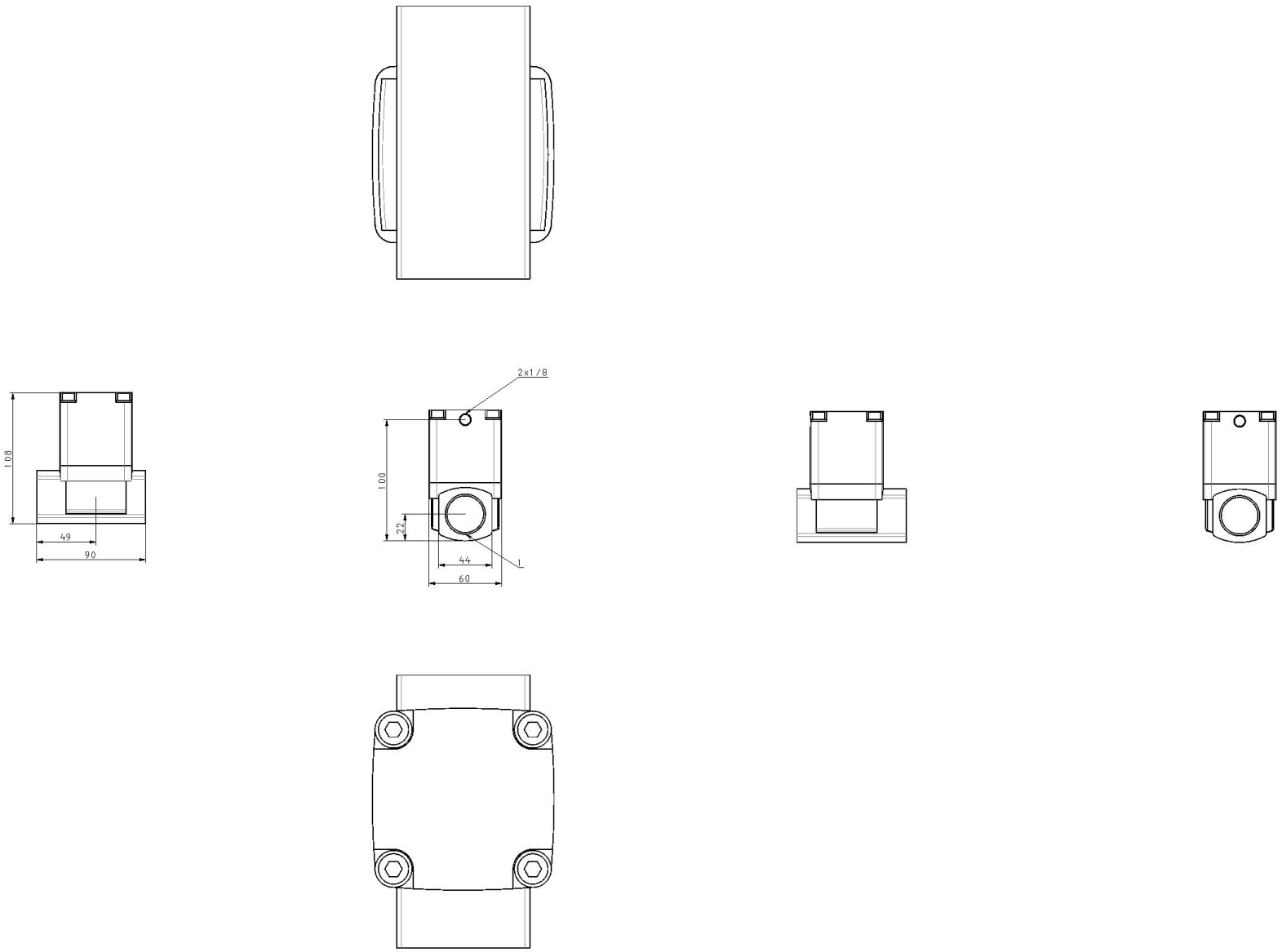

Specifications are subject to change without prior notice and any obligation on the part of the manufacturer.

Additional information

Catalogue	VN_EU.pdf
Declaration of conformity	newDoC_VN_TF1Z328EN.pdf DoC_VNx_TFM0001-B.pdf
Installation manuals	IM_VNB_TF2Z301EN-C.pdf
Operation manuals	OM_VNB_OMA0005EN-E.pdf

Specifications are subject to change without prior notice and any obligation on the part of the manufacturer.

SMC United Kingdom +34 945184126 sales@smc.uk