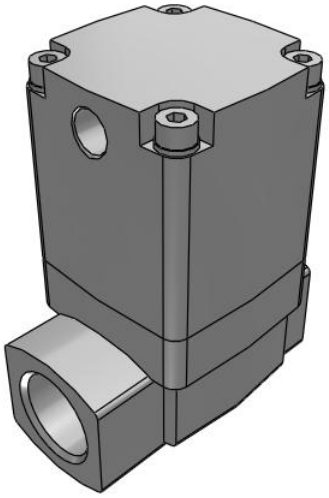

# VNB (Air Operated), Process Valve for Flow Control

## EVNB201BS-F15A

Datasheet

## General series information

- Process valve series VNB
- Air operated type
- Orifice size: 7mm to 50mm
- Port size: 1/8 to 2 Rc(PT)
- Seal material: NBR, FKM, EPR

## Standard specifications

| | |
|---|---|
| Pilot System Option | Standard |
| Bracket | None |
| Sealant | B (FKM Seal) |
| Body Material | S (Stainless Steel Body) |
| Area Code | E (Europe) |
| Size | 2 [ø15 (N.C. 0.5 MPa/N.O. 1 MPa/C.O. 1 MPa), ø11 (N.C. 1 MPa)] |
| Valve Type | 1 [NC (Operating Pressure 0.5MPa)] |
| Port Size | 15A (1/2) |
| Thread | F (G(PF)) |
| Maximum temperature of pressure medium | 99 ºC |
| Minimum temperature of pressure medium | -5 ºC |
| Proof pressure | 1.5 MPa |
| Maximum ambient temperature | 60 ºC |
| Minimum ambient temperature | -5 ºC |
| Pressure range | Low vacuum to 0.5 MPa |
| External pilot air: Press. | 0.25 - 0.7 MPa |
| External pilot air: Temperature | -5 ºC - 60 ºC |

Specifications are subject to change without prior notice and any obligation on the part of the manufacturer.



SMC United Kingdom +34 945184126 sales@smc.uk

| | |
|---|---|
| Weight | 0.600 Kg |

Specifications are subject to change without prior notice and any obligation on the part of the manufacturer.



SMC United Kingdom +34 945184126 sales@smc.uk

# Dimensions

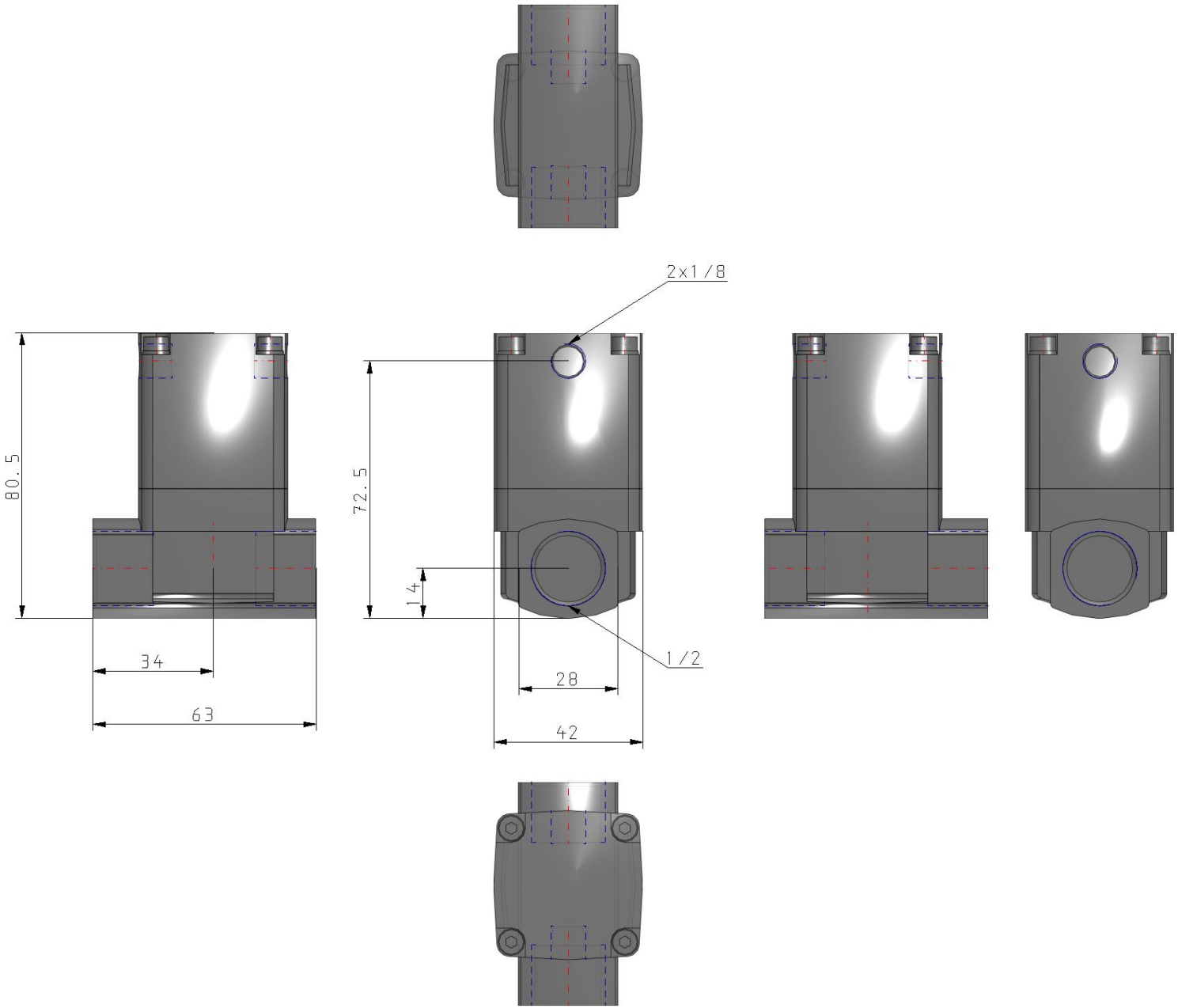


Specifications are subject to change without prior notice and any obligation on the part of the manufacturer.

# Additional information

| | |
|---|---|
| Catalogue | VN_EU.pdf |
| Declaration of conformity | newDoC_VN_TF1Z328EN.pdf<br>DoC_VNx_TFM0001-B.pdf |
| Installation manuals | IM_VNB_TF2Z301EN-D.pdf |
| Operation manuals | OM_VNB_OMA0005EN-E.pdf |

Specifications are subject to change without prior notice and any obligation on the part of the manufacturer.



SMC United Kingdom +34 945184126 sales@smc.uk