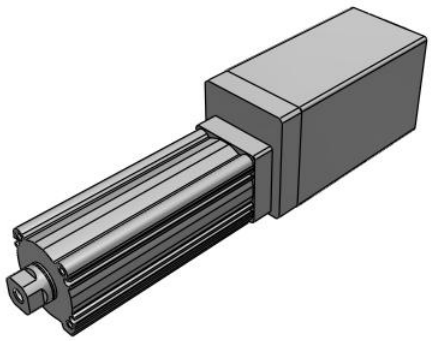

Integrated Controller Rod Type – EQY#H

EQY25DHA-30-B6

Datasheet

General series information

- Body size: 16, 25 and 32 mm
- Ball screw actuation type
- Stroke: 30 to 500 mm
- Horizontal work load: up to 100 kg
- Vertical work load: up to 46 kg
- Speed: up to 900 mm/s
- Horizontal acceleration: up to 10000 mm/s²
- Vertical acceleration: up to 5000 mm/s².

Standard specifications

Size	25
Motor Mounting Position	D (In-line)
Motor Type	H (Battery-less Absolute, Step Motor 24 VDC)
Lead	A (Size 16: 10 mm, Size 25: 12 mm, Size 32: 16 mm)
Stroke	30 mm
Motor Option	Without Option
Rod End Thread	Rod End Female Thread
Mounting	Ends Tapped/Body Bottom Tapped
Controller Position	B (Integrated Controller)
Parallel Input	6 (PNP)
General power supply	24 VDC ±10 %
Conform to the European RoHS Directive	Conform
Approvals	CE, UKCA
Positioning repeatability	±0.02 mm
Lost motion	0.1 mm or less

Specifications are subject to change without prior notice and any obligation on the part of the manufacturer.

SMC CORPORATION Zuazobidea 14, 01012, Vitoria-Gasteiz, Álava +34 945184100 +34 945184126 www.smc.eu emcmarketing@smc.smces.es

Impact/Vibration resistance	50/20 m/s²
Actuation type	Ball screw + Belt (EQY#H), Ball screw (EQY#DH)
Operating humidity range	90 % RH or less (No condensation)
Motor type	Battery-less absolute (Step motor 24 VDC)
Encoder	Battery-less absolute
Horizontal work load	26 kg
Vertical work load	8 kg
Speed	18 - 700 mm/s
Max. Acceleration/deceleration	Horizontal: 10000 mm/s² Vertical: 5000 mm/s²
Power Consumption	86 W
Operating temperature range	5 - 40 ºC
Lock: Holding force	78 N
Guide type	Sliding bushing (Piston rod)
Motor size	42
Lock unit power consumption	5 W
Lock unit rated voltage	24 VDC ±10 %
Technical graph 1	7054ED_graph2_en.jpg
Graph1 title	Speed–Work Load Graph

Technical information graphs

Speed–Work Load Graph

EQY25□HA

Horizontal/Lead 12

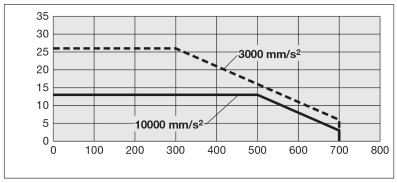

Vertical/Lead 12

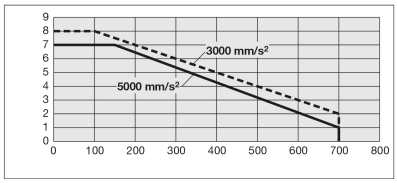

Specifications are subject to change without prior notice and any obligation on the part of the manufacturer.

SMC CORPORATION Zuazobidea 14, 01012, Vitoria-Gasteiz, Álava +34 945184100 +34 945184126 www.smc.eu emcmarketing@smc.smces.es

Dimensions

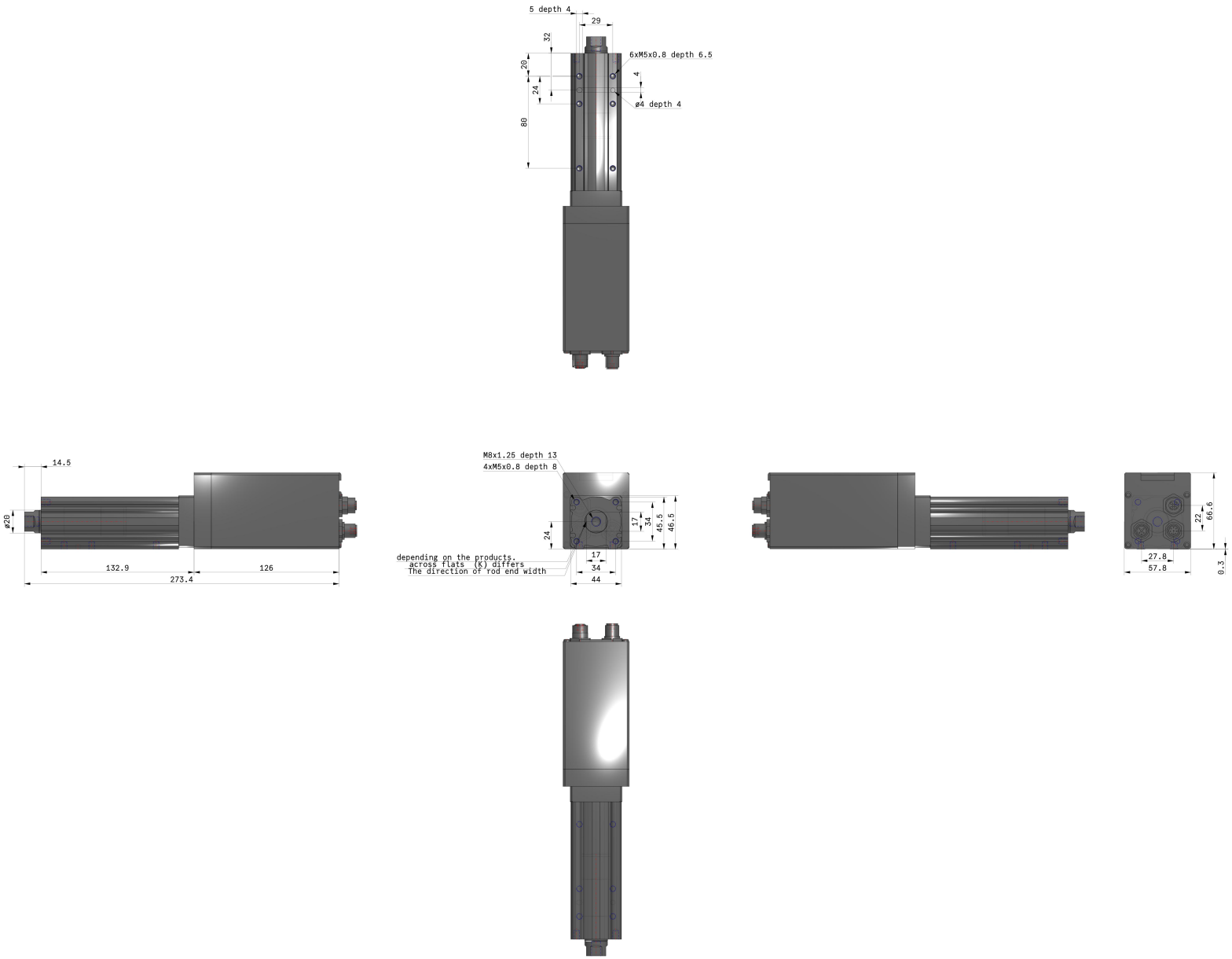

Specifications are subject to change without prior notice and any obligation on the part of the manufacturer.

SMC CORPORATION Zuazobidea 14, 01012, Vitoria-Gasteiz, Álava +34 945184100 +34 945184126 www.smc.eu emcmarketing@smc.smces.es

Constructions

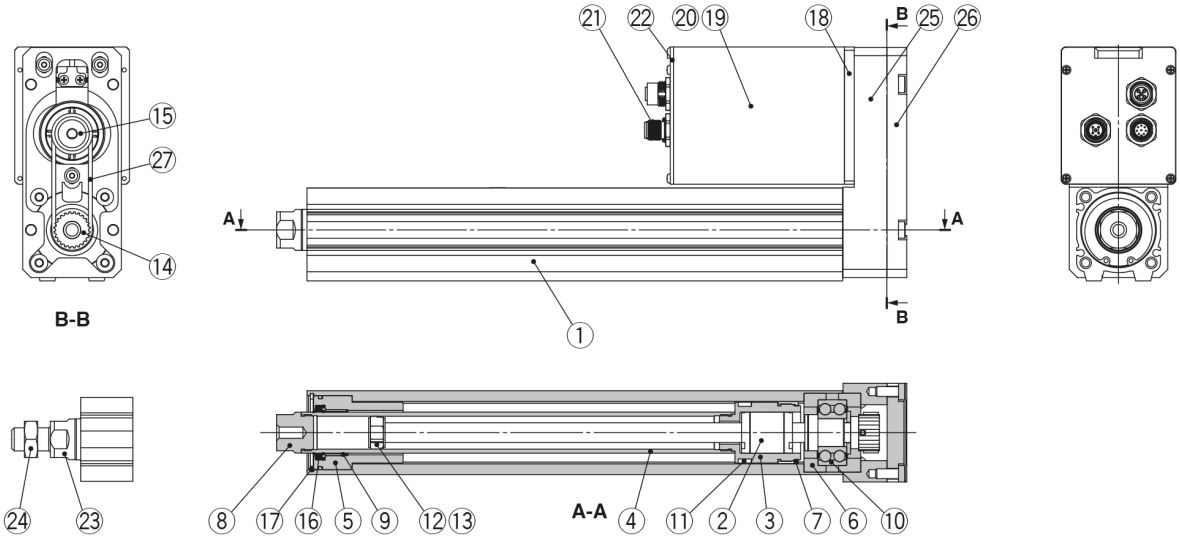

In-line motor

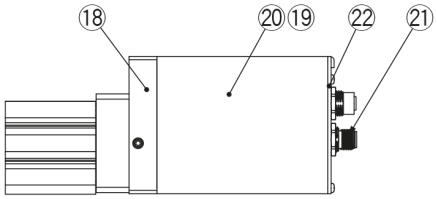

Component Parts

No.	Description	Material	Note
1	**Body**	Aluminium alloy	Anodised
2	**Ball screw assembly**	—	
3	**Piston**	Aluminium alloy	
4	**Piston rod**	Stainless steel	Hard chrome plating
5	**Rod cover**	Aluminium alloy	
6	**Bearing holder**	Aluminium alloy	
7	**Rotation stopper**	Synthetic resin	
8	**Socket (Female thread)**	Free cutting carbon steel	Nickel plating
9	**Bushing**	Bearing alloy	
10	**Bearing**	—	
11	**Magnet**	—	
12	**Wear ring holder**	Stainless steel	101 mm stroke or more
13	**Wear ring**	Synthetic resin	101 mm stroke or more
14	**Screw pulley/hub**	Aluminium alloy	
15	**Motor pulley/hub**	Aluminium alloy	
16	**Seal**	NBR	
17	**Retaining ring**	Steel for spring	
18	**Motor adapter**	Aluminium alloy	Anodised
19	**Motor**	—	
20	**Motor cover**	Aluminium alloy	Anodised
21	**Connector**	—	
22	**End cover**	Aluminium alloy	Anodised
23	**Socket (Male thread)**	Free cutting carbon steel	Nickel plating/ Rod end male thread
24	**Hexagon nut**	—	Rod end male thread

Component Parts (Top/Right/Left side parallel only)

No.	Description	Material	Note
25	**Return box**	Aluminium die-casted	Coating
26	**Return plate**	Aluminium die-casted	Coating
27	**Belt**	—	

Specifications are subject to change without prior notice and any obligation on the part of the manufacturer.

SMC CORPORATION Zuazobidea 14, 01012, Vitoria-Gasteiz, Álava +34 945184100 +34 945184126 www.smc.eu emcmarketing@smc.smces.es

Additional information

Catalogue	EQFSH-EQYH-C_EU.pdf
Installation manuals	IM_EQYxH_TF222-152EN-B.pdf

Specifications are subject to change without prior notice and any obligation on the part of the manufacturer.

SMC CORPORATION Zuazobidea 14, 01012, Vitoria-Gasteiz, Álava +34 945184100 +34 945184126 www.smc.eu emcmarketing@smc.smces.es