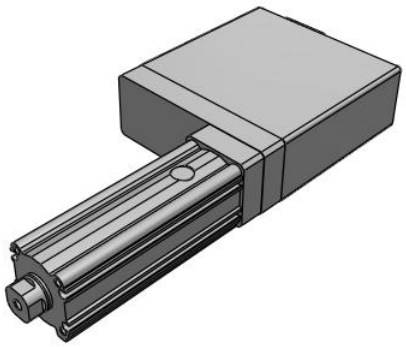

# Integrated Controller Rod Type – EQY#H

## EQY16D2HA-30-B6

Datasheet

## General series information

- IO-Link compatible
- Body size: 16, 25 and 32 mm
- Ball screw actuation type
- Stroke: 30 to 500 mm
- Horizontal work load: up to 100 kg
- Vertical work load: up to 46 kg
- Speed: up to 900 mm/s
- Horizontal acceleration: up to 10000 mm/s²
- Vertical acceleration: up to 5000 mm/s².

## Standard specifications

| | |
|---|---|
| Size | 16 |
| Motor Mounting Position | D2 (In-line, Right Side) |
| Motor Type | H (Battery-less Absolute, Step Motor 24 VDC) |
| Lead | A (Size 16: 10 mm, Size 25: 12 mm, Size 32: 16 mm) |
| Stroke | 30 mm |
| Motor Option | Without Option |
| Rod End Thread | Rod End Female Thread |
| Mounting | Ends Tapped/Body Bottom Tapped |
| Controller Position | B (Integrated Controller) |
| Interface (Parallel Input/Output/Communication Protocol) | 6 (PNP) |
| Conform to the European RoHS Directive | Conform |
| Positioning repeatability | ±0.02 mm |
| Lost motion | 0.1 mm or less |

Specifications are subject to change without prior notice and any obligation on the part of the manufacturer.



SMC CORPORATION Zuazobidea 14, 01012, Vitoria-Gasteiz, Álava +34 945184100 +34 945184126 www.smc.eu support.marketingeurope@smc.com

| | |
|---|---|
| Impact/Vibration resistance | 50/20 m/s² |
| Actuation type | Ball screw + Belt (EQY#H), Ball screw (EQY#DH) |
| Operating humidity range | 90 % RH or less (No condensation) |
| Motor type | Battery-less absolute (Step motor 24 VDC) |
| Encoder | Battery-less absolute |
| Horizontal work load | 17 kg |
| Vertical work load | 3 kg |
| Speed | 15 - 700 mm/s |
| Max. Acceleration/deceleration | Horizontal: 10000 mm/s² Vertical: 5000 mm/s² |
| Power Consumption | 82 W |
| Operating temperature range | 5 - 40 ºC |
| Lock: Holding force | 29 N |
| Guide type | Sliding bushing (Piston rod) |
| Motor size | 28 |
| Lock unit power consumption | 5 W |
| Lock unit rated voltage | 24 VDC ±10 % |
| Technical graph 1 | 7054ED_graph9_en.jpg |
| Graph1 title | Speed–Work Load Graph |

# Technical information graphs

## Speed–Work Load Graph

**EQY16□HA**

**Horizontal/Lead 10**

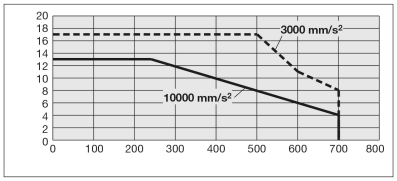


**Vertical/Lead 10**

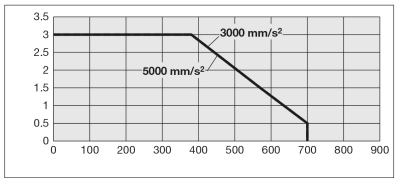


Specifications are subject to change without prior notice and any obligation on the part of the manufacturer.



SMC CORPORATION Zuazobidea 14, 01012, Vitoria-Gasteiz, Álava +34 945184100 +34 945184126 www.smc.eu support.marketingeurope@smc.com

# Dimensions

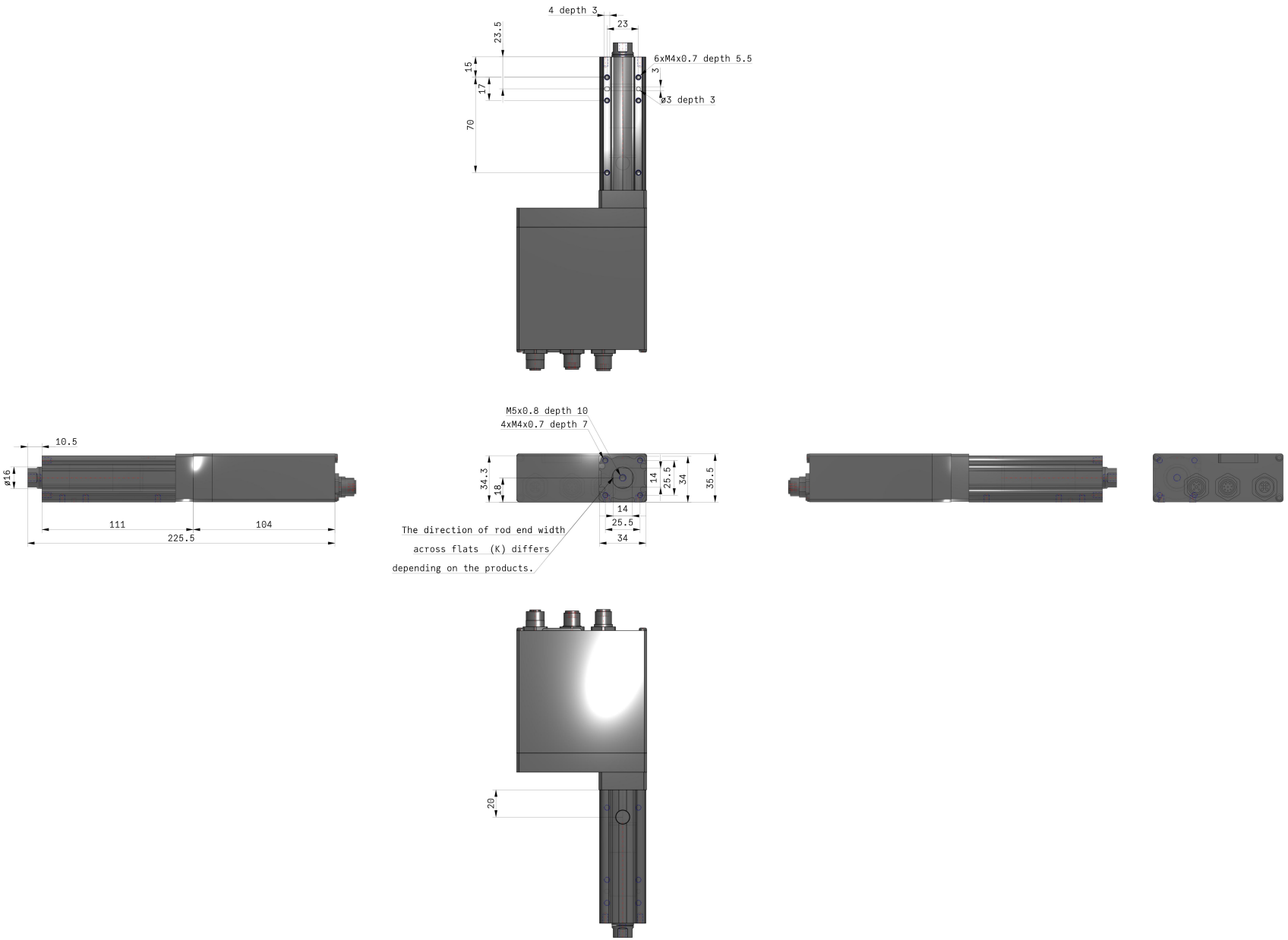


Specifications are subject to change without prior notice and any obligation on the part of the manufacturer.



SMC CORPORATION Zuazobidea 14, 01012, Vitoria-Gasteiz, Álava +34 945184100 +34 945184126 www.smc.eu support.marketingeurope@smc.com

# Constructions

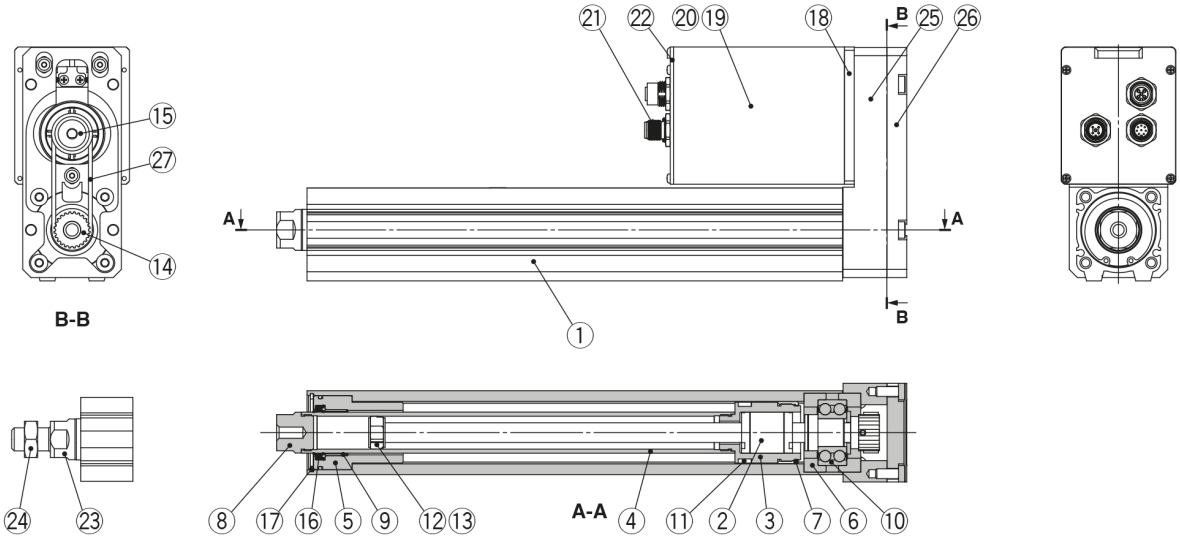


**In-line motor**

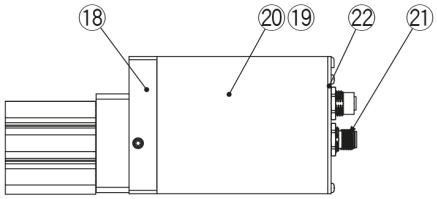


## Component Parts

| No. | Description | Material | Note |
|---|---|---|---|
| 1 | **Body** | Aluminium alloy | Anodised |
| 2 | **Ball screw assembly** | — | |
| 3 | **Piston** | Aluminium alloy | |
| 4 | **Piston rod** | Stainless steel | Hard chrome plating |
| 5 | **Rod cover** | Aluminium alloy | |
| 6 | **Bearing holder** | Aluminium alloy | |
| 7 | **Rotation stopper** | Synthetic resin | |
| 8 | **Socket (Female thread)** | Free cutting carbon steel | Nickel plating |
| 9 | **Bushing** | Bearing alloy | |
| 10 | **Bearing** | — | |
| 11 | **Magnet** | — | |
| 12 | **Wear ring holder** | Stainless steel | 101 mm stroke or more |
| 13 | **Wear ring** | Synthetic resin | 101 mm stroke or more |
| 14 | **Screw pulley/hub** | Aluminium alloy | |
| 15 | **Motor pulley/hub** | Aluminium alloy | |
| 16 | **Seal** | NBR | |
| 17 | **Retaining ring** | Steel for spring | |
| 18 | **Motor adapter** | Aluminium alloy | Anodised |
| 19 | **Motor** | — | |
| 20 | **Motor cover** | Aluminium alloy | Anodised |
| 21 | **Connector** | — | |
| 22 | **End cover** | Aluminium alloy | Anodised |
| 23 | **Socket (Male thread)** | Free cutting carbon steel | Nickel plating/ Rod end male thread |
| 24 | **Hexagon nut** | — | Rod end male thread |

## Component Parts (Top/Right/Left side parallel only)

| No. | Description | Material | Note |
|---|---|---|---|
| 25 | **Return box** | Aluminium die-casted | Coating |
| 26 | **Return plate** | Aluminium die-casted | Coating |
| 27 | **Belt** | — | |

*Specifications are subject to change without prior notice and any obligation on the part of the manufacturer.*



**SMC CORPORATION** Zuazobidea 14, 01012, Vitoria-Gasteiz, Álava +34 945184100 +34 945184126 www.smc.eu support.marketingeurope@smc.com

# Additional information

| | |
|---|---|
| Catalogue | EQFSH-EQYH-EQYGH-D_EU.pdf |
| Declaration of conformity | newDoC_EQY_TF122-175EN-B.pdf |
| Installation manuals | IM_EQYxH_TF222-152EN-B.pdf |
| Operation manuals | OM_EQY_DOC1023126EN-1.pdf<br>OM_JXC_OMA1006EN-D.pdf<br>OM_EQ_DOC1138459EN-1.pdf |

Specifications are subject to change without prior notice and any obligation on the part of the manufacturer.



SMC CORPORATION Zuazobidea 14, 01012, Vitoria-Gasteiz, Álava +34 945184100 +34 945184126 www.smc.eu support.marketingeurope@smc.com