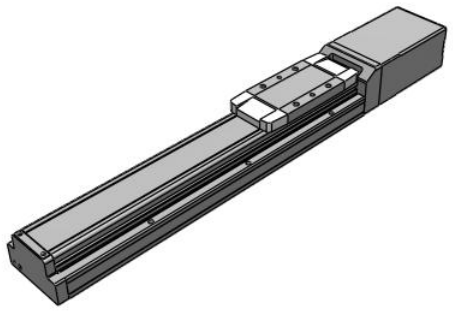

# Integrated Controller Slider Type – EQFS#H

## EQFS40HA-300-B6

Datasheet

## General series information

- Body size: 16, 25, 32 and 40 mm
- Ball screw actuation type
- Stroke: 50 to 1200 mm
- Horizontal work load: up to 80 kg
- Vertical work load: up to 40 kg
- Speed: up to 1200 mm/s
- Horizontal acceleration: up to 10000 mm/s²
- Vertical acceleration: up to 5000 mm/s².

## Standard specifications

| | |
|---|---|
| Size | 40 |
| Motor Mounting Position | In-line |
| Motor Type | H (Battery-less Absolute, Step Motor 24 VDC) |
| Lead | A (Size 16: 10 mm, Size 25: 12 mm, Size 32: 16 mm, Size 40: 20 mm) |
| Stroke | 300 mm |
| Motor Option | Without Option |
| Grease Application | With |
| Controller Position | B (Integrated Controller) |
| Parallel Input | 6 (PNP) |
| Conform to the European RoHS Directive | Conform |
| Approvals | CE, UKCA |
| Positioning repeatability | ±0.02 mm |
| Lost motion | 0.1 mm or less |
| Impact/Vibration resistance | 50/20 m/s² |

Specifications are subject to change without prior notice and any obligation on the part of the manufacturer.



SMC CORPORATION Zuazobidea 14, 01012, Vitoria-Gasteiz, Álava +34 945184100 +34 945184126 www.smc.eu emcmarketing@smc.smces.es

| | |
|---|---|
| Actuation type | Ball screw (EQFS#H) Ball screw + Belt (EQFS#RH/EQFS#LH) |
| Motor type | Battery-less absolute (Step motor 24 VDC) |
| Encoder | Battery-less absolute |
| Horizontal work load | 60 kg |
| Vertical work load | 4,5 kg |
| Speed | 30 - 1200 mm/s |
| Max. Acceleration/deceleration | Horizontal: 10000 mm/s² Vertical: 5000 mm/s² |
| Operating humidity range | 90 % RH or less (No condensation) |
| Operating temperature range | 5 - 40 ºC |
| Lock: Holding force | 113 N |
| Guide type | Linear guide |
| Motor size | 56.4 |
| Lock unit type | Non-magnetising lock |
| Lock unit rated voltage | 24 VDC ±10 % |
| Technical graph 1 | 7054EE_graph10_en.jpg |
| Graph1 title | Speed–Work Load Graph |

# Technical information graphs

## Speed–Work Load Graph

**EQFS40□HA/Ball Screw Drive**

**Horizontal/Lead 20**

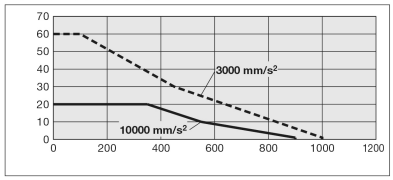


**Vertical/Lead 20**

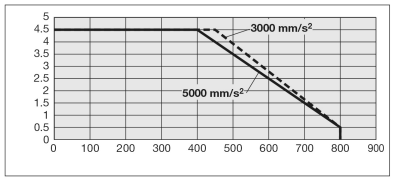


Specifications are subject to change without prior notice and any obligation on the part of the manufacturer.



SMC CORPORATION Zuazobidea 14, 01012, Vitoria-Gasteiz, Álava +34 945184100 +34 945184126 www.smc.eu emcmarketing@smc.smces.es

# Dimensions

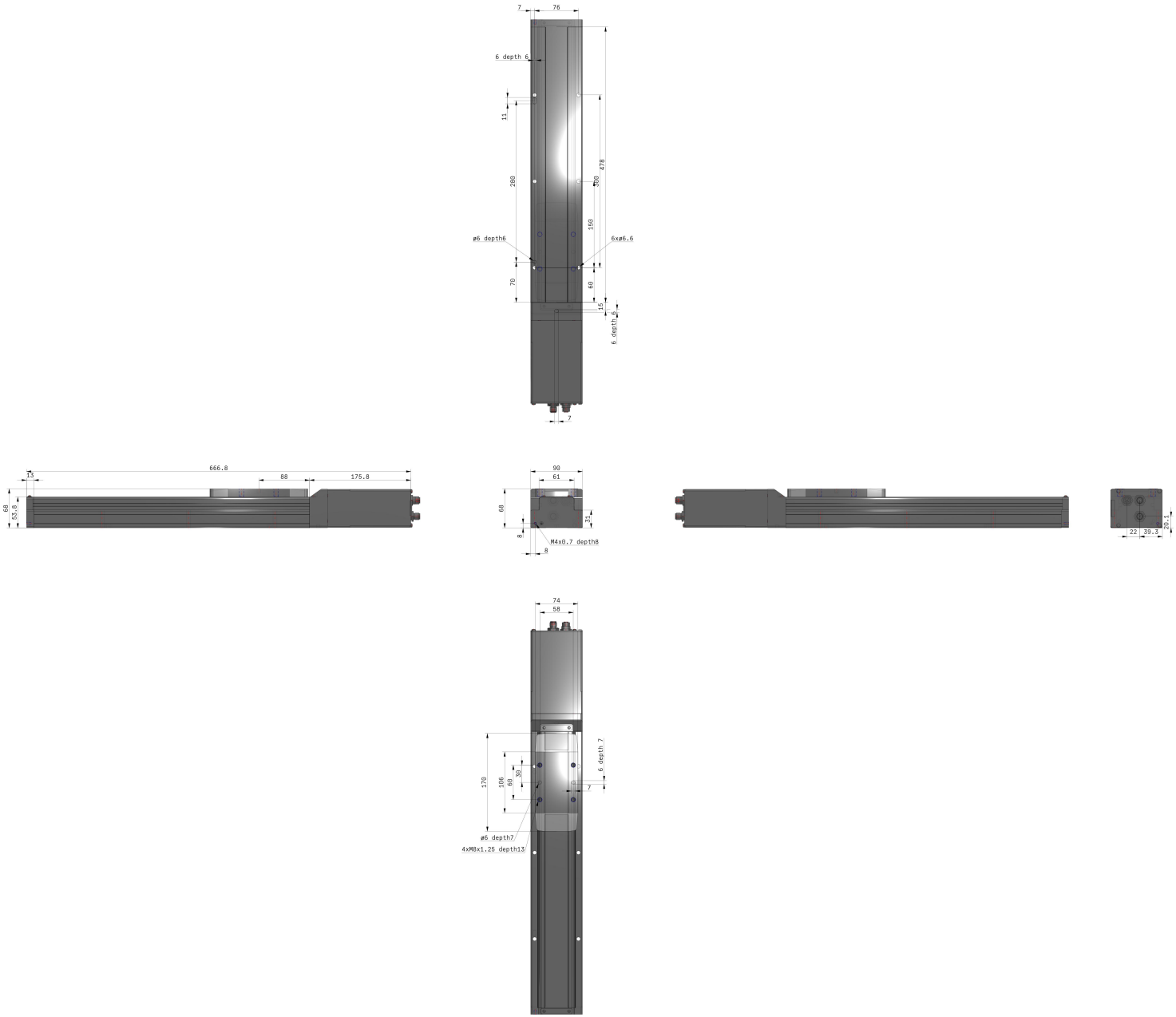


Specifications are subject to change without prior notice and any obligation on the part of the manufacturer.



**SMC CORPORATION** Zuazobidea 14, 01012, Vitoria-Gasteiz, Álava +34 945184100 +34 945184126 www.smc.eu emcmarketing@smc.smces.es

# Constructions

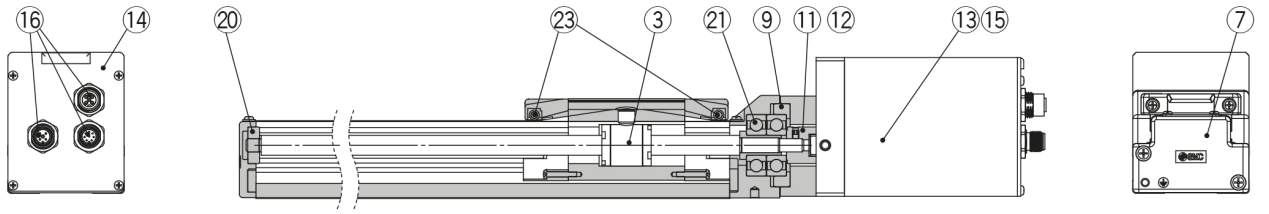


In-line motor

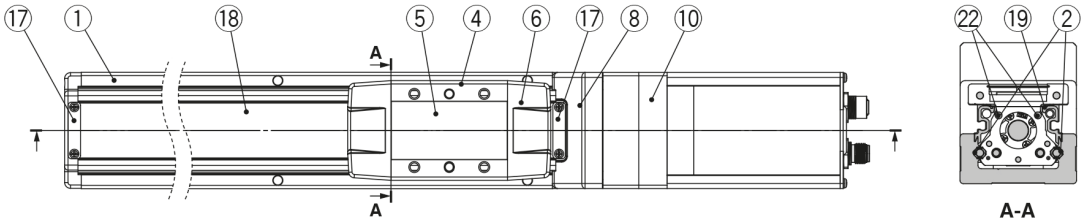


A-A

Right/Left side parallel motor

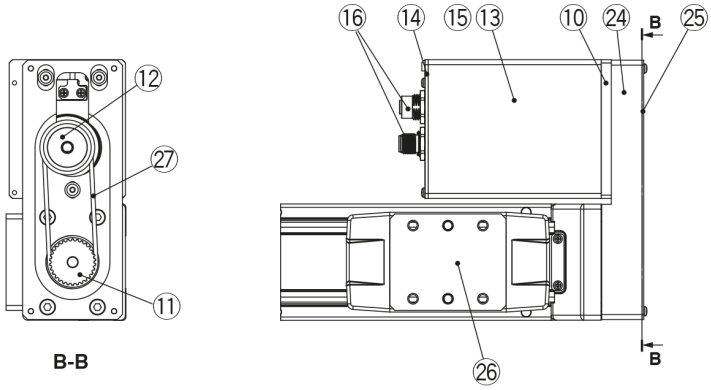


B-B

## Component Parts

| No. | Description | Material | Note |
|---|---|---|---|
| 1 | **Body** | Aluminium alloy | Anodised |
| 2 | **Rail guide** | — | |
| 3 | **Ball screw assembly** | — | |
| 4 | **Table** | Aluminium alloy | Anodised |
| 5 | **Blanking plate** | Aluminium alloy | Anodised |
| 6 | **Seal band holder** | Synthetic resin | |
| 7 | **Housing A** | Aluminium die-casted | Coating |
| 8 | **Housing B** | Aluminium die-casted | Coating |
| 9 | **Bearing stopper** | Aluminium alloy | |
| 10 | **Motor adapter** | Aluminium alloy | Coating |
| 11 | **Screw hub/pulley** | Aluminium alloy | |
| 12 | **Motor hub/pulley** | Aluminium alloy | |
| 13 | **Motor cover** | Aluminium alloy | Anodised |
| 14 | **End cover** | Aluminium alloy | Anodised |
| 15 | **Motor** | — | |
| 16 | **Connector** | — | |
| 17 | **Band stopper** | Stainless steel | |
| 18 | **Dust seal band** | Stainless steel | |
| 19 | **Seal magnet** | — | |
| 20 | **Bearing** | — | 201 mm stroke or more |
| 21 | **Bearing** | — | |
| 22 | **Magnet** | — | |
| 23 | **Roller shaft** | Stainless steel | Without grease application |

## Component Parts (Right/Left side parallel only)

| No. | Description | Material | Note |
|---|---|---|---|
| 24 | **Return plate** | Aluminium alloy | Coating |
| 25 | **Cover plate** | Aluminium alloy | Anodised |
| 26 | **Table spacer** | Aluminium alloy | Anodised |
| 27 | **Belt** | — | |

*Specifications are subject to change without prior notice and any obligation on the part of the manufacturer.*



**SMC CORPORATION** Zuazobidea 14, 01012, Vitoria-Gasteiz, Álava +34 945184100 +34 945184126 www.smc.eu emcmarketing@smc.smces.es

## Additional information

| | |
|---|---|
| Catalogue | EQFSH-EQYH-C_EU.pdf |
| Declaration of conformity | newDoC_EQF_TF122-174EN-A.pdf |
| Installation manuals | IM_EQFS_TF222-151EN-B.pdf |
| Operation manuals | OM_EQFS_DOC1023125EN-1.pdf |

Specifications are subject to change without prior notice and any obligation on the part of the manufacturer.



SMC CORPORATION Zuazobidea 14, 01012, Vitoria-Gasteiz, Álava +34 945184100 +34 945184126 www.smc.eu emcmarketing@smc.smces.es