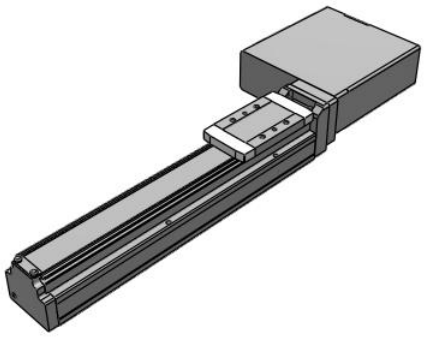

Integrated Controller Slider Type – EQFS#H

EQFS16D2HA-150-B6

Datasheet

General series information

- IO-Link compatible
- Body size: 16, 25, 32 and 40 mm
- Ball screw actuation type
- Stroke: 50 to 1200 mm
- Horizontal work load: up to 80 kg
- Vertical work load: up to 40 kg
- Speed: up to 1200 mm/s
- Horizontal acceleration: up to 10000 mm/s²
- Vertical acceleration: up to 5000 mm/s².

Standard specifications

Size	16
Motor Mounting Position	D2 (In-line, Right Side)
Motor Type	H (Battery-less Absolute, Step Motor 24 VDC)
Lead	A (Size 16: 10 mm, Size 25: 12 mm, Size 32: 16 mm, Size 40: 20 mm)
Stroke	150 mm
Motor Option	Without Option
Grease Application	With
Controller Position	B (Integrated Controller)
Interface (Parallel Input/Output/Communication Protocol)	6 (PNP)
Conform to the European RoHS Directive	Conform
Approvals	CE, UKCA
Positioning repeatability	±0.02 mm
Lost motion	0.1 mm or less

Specifications are subject to change without prior notice and any obligation on the part of the manufacturer.

SMC CORPORATION Zuazobidea 14, 01012, Vitoria-Gasteiz, Álava +34 945184100 +34 945184126 www.smc.eu support.marketingeurope@smc.com

Impact/Vibration resistance	50/20 m/s²
Actuation type	Ball screw (EQFS25H) Ball screw + Belt (EQFS25RH/EQFS25LH)
Motor type	Battery-less absolute (Step motor 24 VDC)
Encoder	Battery-less absolute
Horizontal work load	10 kg
Vertical work load	3 kg
Speed	10 - 800 mm/s
Max. Acceleration/deceleration	Horizontal: 10000 mm/s² Vertical: 5000 mm/s²
Operating humidity range	90 % RH or less (No condensation)
Operating temperature range	5 - 40 ºC
Lock: Holding force	29 N
Guide type	Linear guide
Motor size	28
Lock unit type	Non-magnetising lock
Lock unit rated voltage	24 VDC ±10 %
Technical graph 1	7054EE_graph13_en.jpg
Graph1 title	Speed–Work Load Graph

Technical information graphs

Speed–Work Load Graph

EQFS16□HA/Ball Screw Drive

Horizontal/Lead 10

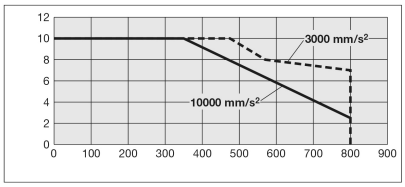

Vertical/Lead 10

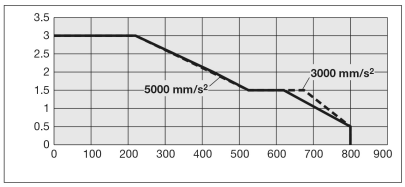

Specifications are subject to change without prior notice and any obligation on the part of the manufacturer.

SMC CORPORATION Zuazobidea 14, 01012, Vitoria-Gasteiz, Álava +34 945184100 +34 945184126 www.smc.eu support.marketingeurope@smc.com

Dimensions

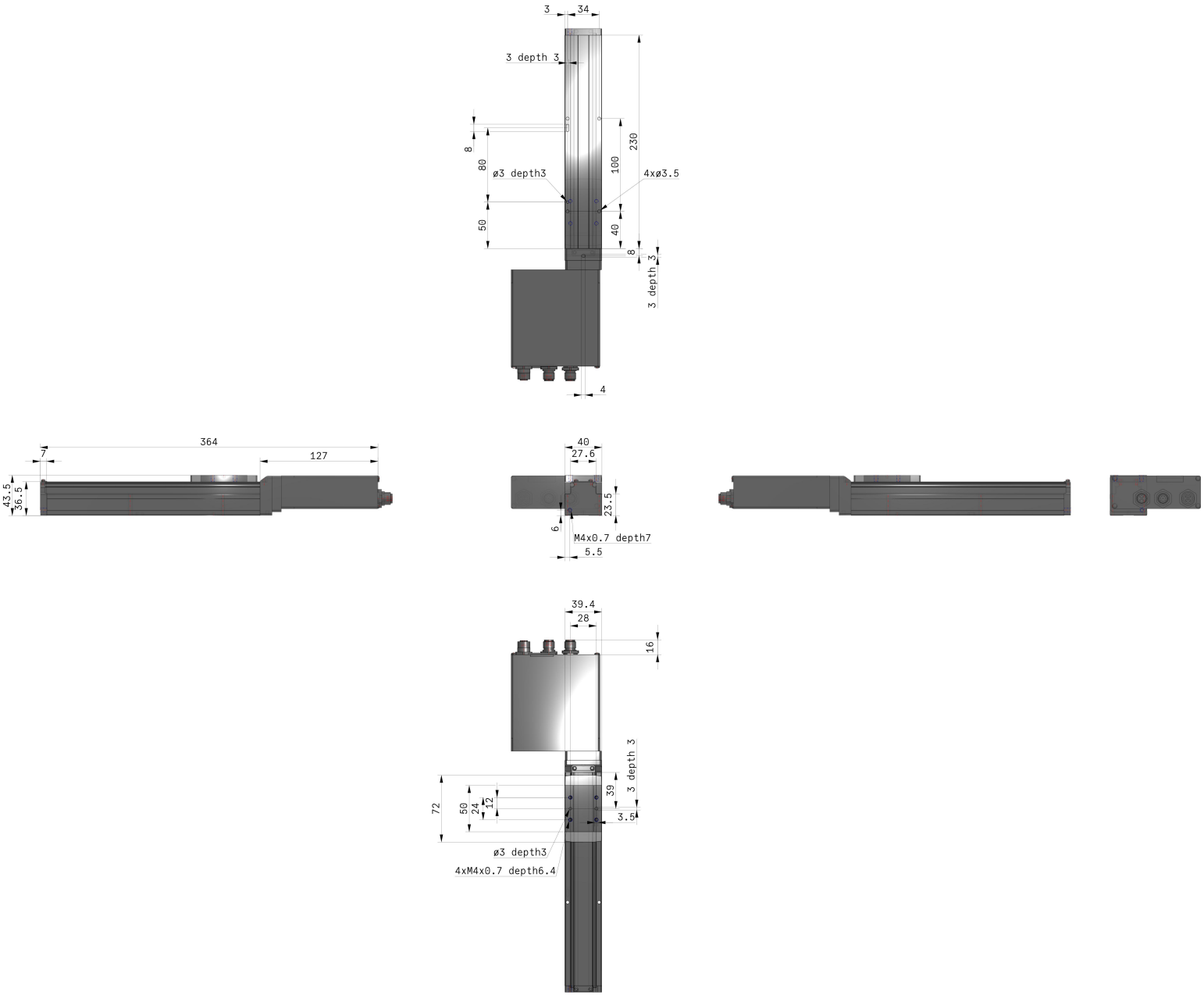

Specifications are subject to change without prior notice and any obligation on the part of the manufacturer.

SMC CORPORATION Zuazobidea 14, 01012, Vitoria-Gasteiz, Álava +34 945184100 +34 945184126 www.smc.eu support.marketingeurope@smc.com

Constructions

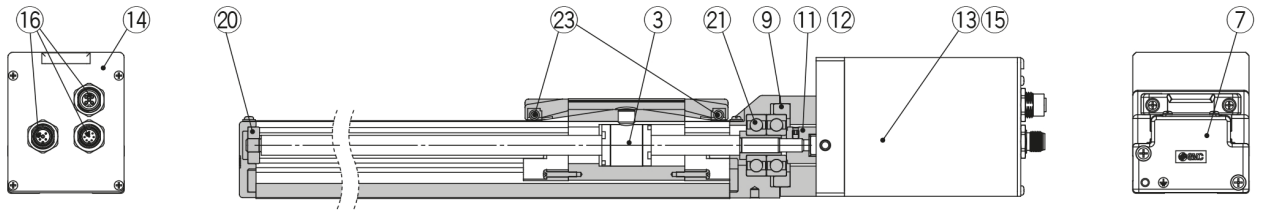

In-line motor

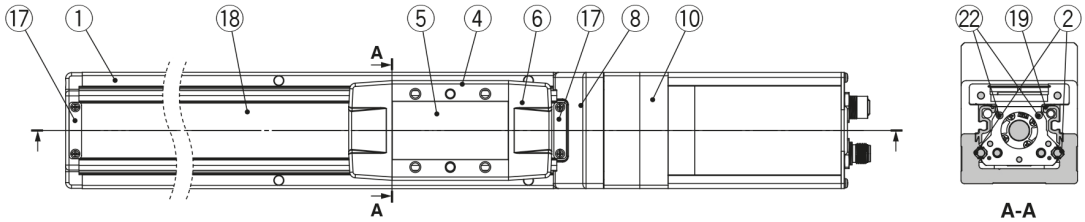

A-A

Right/Left side parallel motor

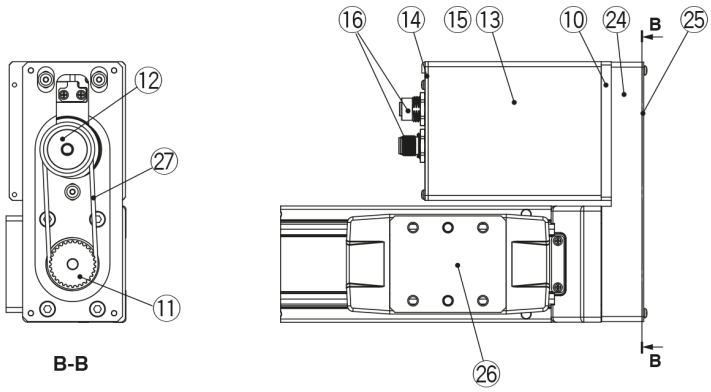

B-B

Component Parts

No.	Description	Material	Note
1	**Body**	Aluminium alloy	Anodised
2	**Rail guide**	—	
3	**Ball screw assembly**	—	
4	**Table**	Aluminium alloy	Anodised
5	**Blanking plate**	Aluminium alloy	Anodised
6	**Seal band holder**	Synthetic resin	
7	**Housing A**	Aluminium die-casted	Coating
8	**Housing B**	Aluminium die-casted	Coating
9	**Bearing stopper**	Aluminium alloy	
10	**Motor adapter**	Aluminium alloy	Coating
11	**Screw hub/pulley**	Aluminium alloy	
12	**Motor hub/pulley**	Aluminium alloy	
13	**Motor cover**	Aluminium alloy	Anodised
14	**End cover**	Aluminium alloy	Anodised
15	**Motor**	—	
16	**Connector**	—	
17	**Band stopper**	Stainless steel	
18	**Dust seal band**	Stainless steel	
19	**Seal magnet**	—	
20	**Bearing**	—	201 mm stroke or more
21	**Bearing**	—	
22	**Magnet**	—	
23	**Roller shaft**	Stainless steel	Without grease application

Component Parts (Right/Left side parallel only)

No.	Description	Material	Note
24	**Return plate**	Aluminium alloy	Coating
25	**Cover plate**	Aluminium alloy	Anodised
26	**Table spacer**	Aluminium alloy	Anodised
27	**Belt**	—	

Specifications are subject to change without prior notice and any obligation on the part of the manufacturer.

SMC CORPORATION Zuazobidea 14, 01012, Vitoria-Gasteiz, Álava +34 945184100 +34 945184126 www.smc.eu support.marketingeurope@smc.com

Additional information

Catalogue	EQFSH-EQYH-EQYGH-D_EU.pdf
Declaration of conformity	newDoC_EQF_TF125-482EN.pdf newDoC_EQY_TF122-175EN-B.pdf
Installation manuals	IM_EQFS_TF222-151EN-B.pdf
Operation manuals	OM_EQFS_DOC1023125EN-2.pdf OM_JXC_OMA1006EN-D.pdf OM_EQ_DOC1138459EN-1.pdf

Specifications are subject to change without prior notice and any obligation on the part of the manufacturer.

SMC CORPORATION Zuazobidea 14, 01012, Vitoria-Gasteiz, Álava +34 945184100 +34 945184126 www.smc.eu support.marketingeurope@smc.com