D-MP, Actuator Position Sensor
D-MP100B

Datasheet

General series information

- Measuring range: 25mm, 50mm, 100mm and 200mm.
- Applicable Cylinder: MB, CQ2, MGP, CXSJ, CP96, C96 and C55.
- Compatible IO-Link.
- Analogue output: Voltage output (0 to 10 [V]), Current output (4 to 20 [mA]).
- Analogue output can be reversed.
- Setting is available by simply touching the touch pad.
- Lead wire connection: Separate line, M8-4pin and M12-4 pin.

Standard specifications

Measuring Range	100 (100 mm)
Lead Wire	B (M8-4 Pin, 0.3 m)
Maximum ambient temperature	60 °C
Minimum ambient temperature	-10 °C
General power supply	10 to 30 VDC
Protection class with connector	IP67
Internal voltage drop	2 V or less
Repeatability	0.1 mm (Ambient temperature: 25 °C)
Linearity	± 0.3 mm (Ambient temperature: 25 °C)
Current consumption	48 mA or less (when no load is applied)
Power supply voltage	15 to 30 VDC
Resolution	0.05 mm
Switch output	NPN or PNP
Maximum load current	40 mA
Analog current output	4 to 20 mA
Analog voltage output	0 to 10 V

Specifications are subject to change without prior notice and any obligation on the part of the manufacturer.

SMC United Kingdom +34 945184126 sales@smc.uk

Weight	0.090 Kg

Specifications are subject to change without prior notice and any obligation on the part of the manufacturer.

SMC United Kingdom +34 945184126 sales@smc.uk

Dimensions

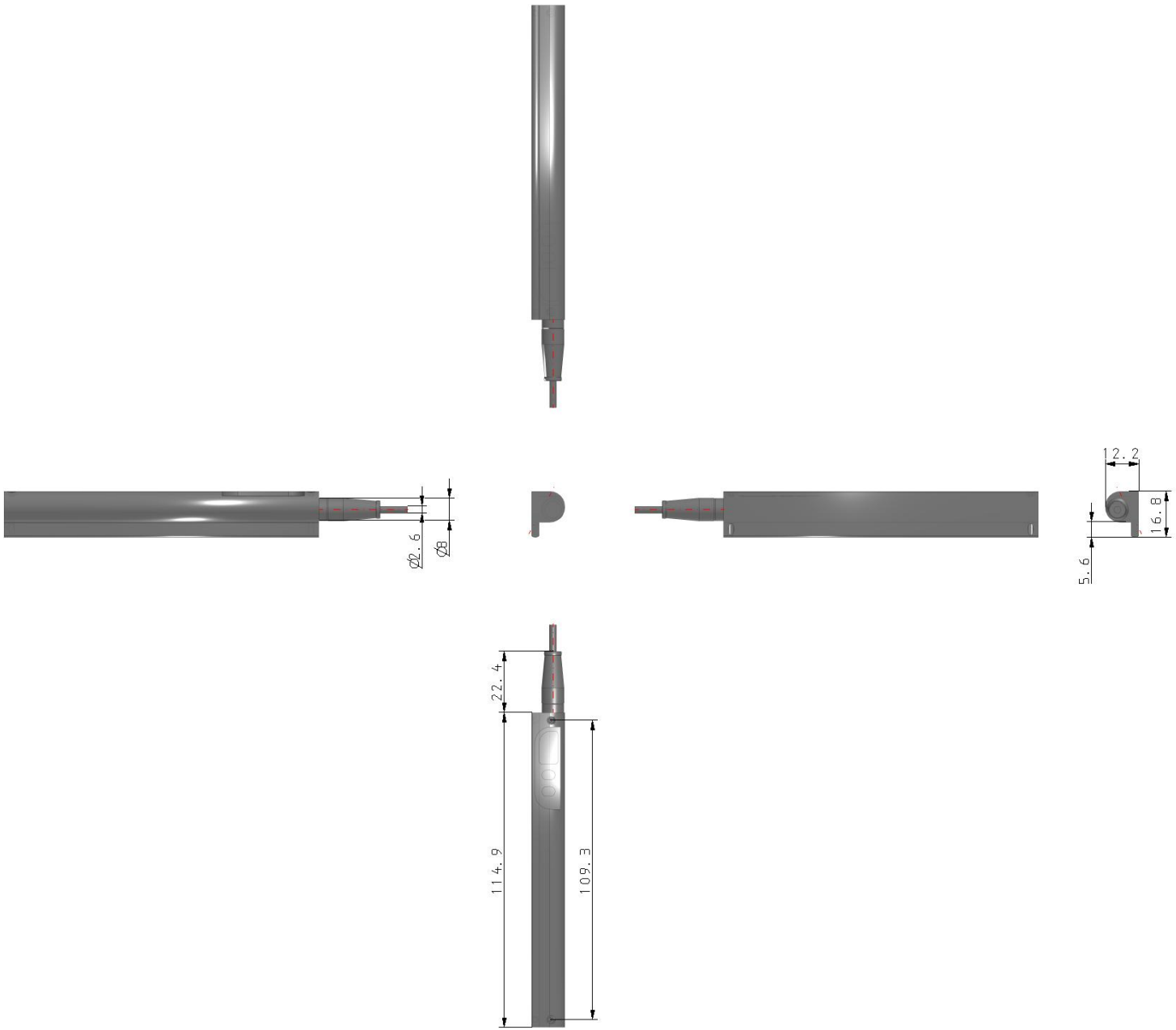

Specifications are subject to change without prior notice and any obligation on the part of the manufacturer.

Additional information

Catalogue	D-MP_-B_EU.pdf
Declaration of conformity	newDoC_MPx_TF124-099EN.pdf newDoC_D-MPxS_TF1X160EN.pdf newDoC_MPx_TF125-033EN.pdf
Installation manuals	IM_D-MP_SMX03EN-A.pdf
Operation manuals	OM_D-MP_OMU0002EN-B.pdf

Specifications are subject to change without prior notice and any obligation on the part of the manufacturer.

SMC United Kingdom +34 945184126 sales@smc.uk