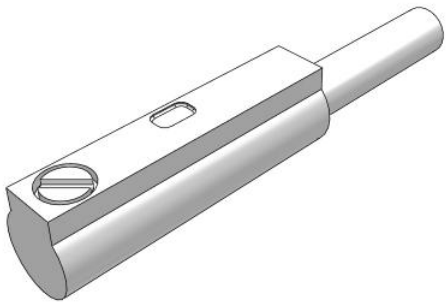

D-M9N-5/M9P-5/M9B-5, Solid State Switch, Short Type, Direct Mounting, Grommet, In-line

D-M9PL-5

Datasheet

General series information

- Body length: 15 mm.
- Electrical entry: Grommet.
- Application Load: IC circuit/Relay/PLC, 24V DC Relay/PLC.
- Power voltage: 5/12/24V DC (4.5 to 28V DC).
- Load current: 2.5 to 40mA.

Standard specifications

Model	M9P (3-wire, PNP)
Lead Wire Length	L (3 m)
Approvals	CE
Weight	0.030 Kg

Specifications are subject to change without prior notice and any obligation on the part of the manufacturer.

SMC CORPORATION Zuazobidea 14, 01012, Vitoria-Gasteiz, Álava +34 945184100 +34 945184126 www.smc.eu emcmarketing@smc.smces.es

Dimensions

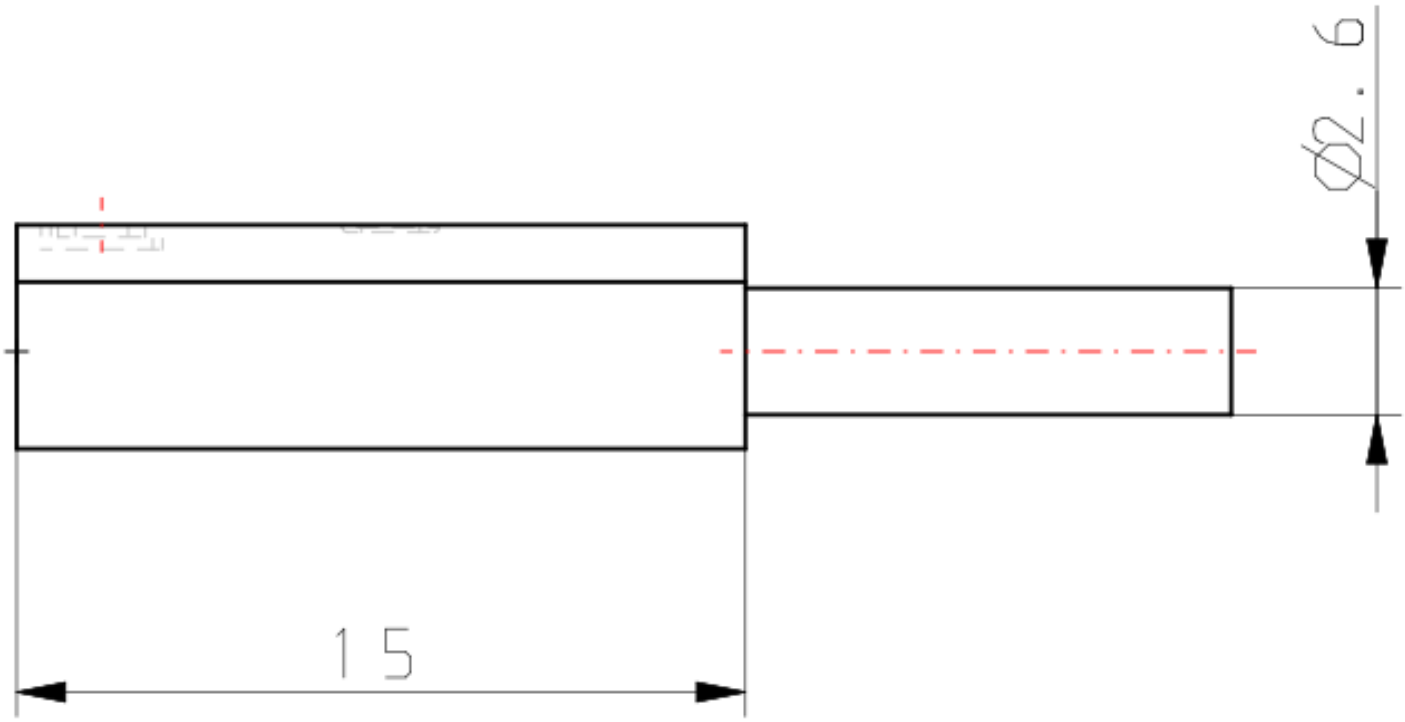

Specifications are subject to change without prior notice and any obligation on the part of the manufacturer.

SMC CORPORATION Zuazobidea 14, 01012, Vitoria-Gasteiz, Álava +34 945184100 +34 945184126 www.smc.eu emcmarketing@smc.smces.es

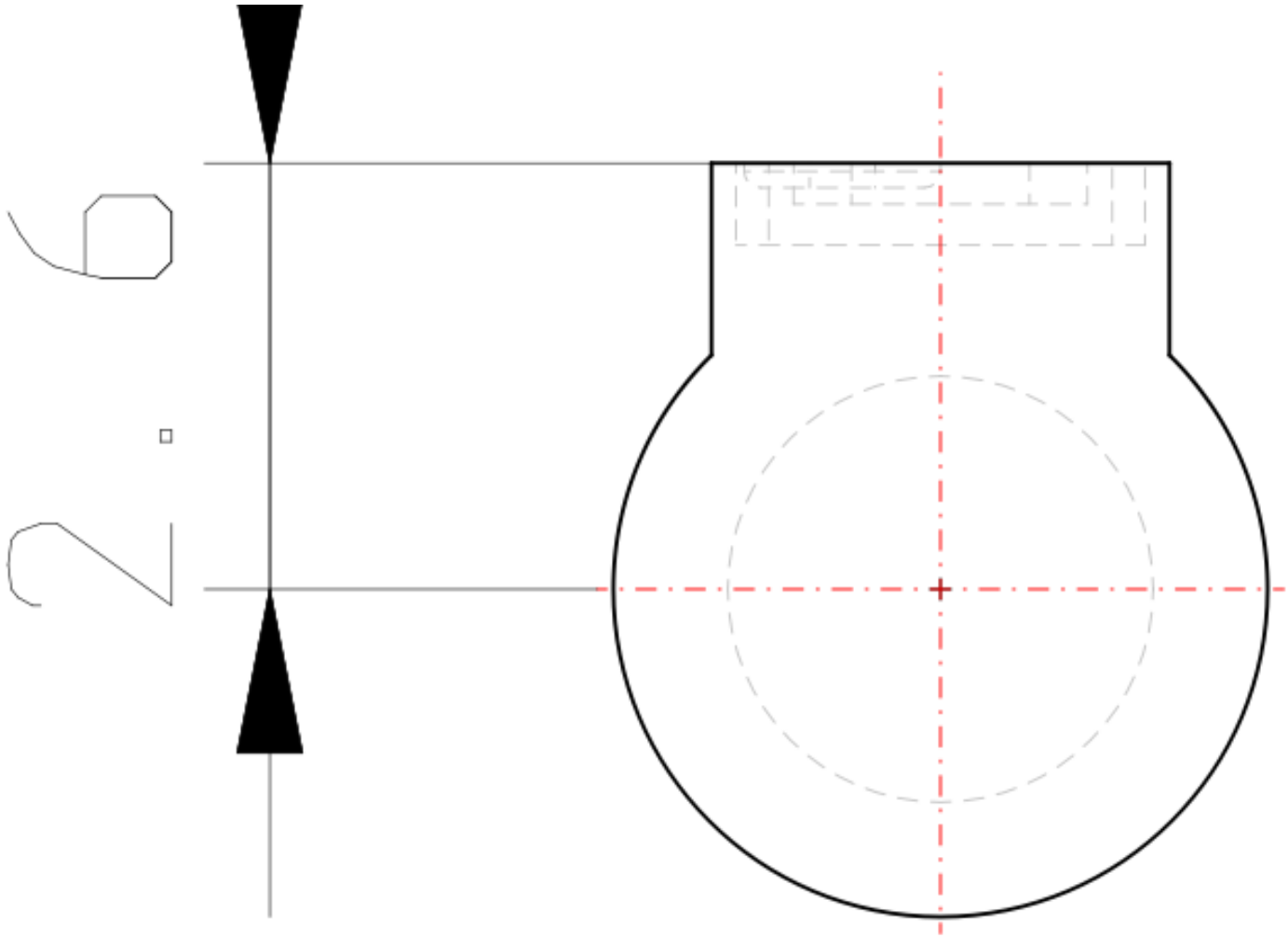

Specifications are subject to change without prior notice and any obligation on the part of the manufacturer.

SMC CORPORATION Zuazobidea 14, 01012, Vitoria-Gasteiz, Álava +34 945184100 +34 945184126 www.smc.eu emcmarketing@smc.smces.es

Additional information

Catalogue	D-M9-5_EU.pdf
Declaration of conformity	newDoC_D-xS_TF1Y230EN.pdf newDoC_D-xS_TF1V225EN.pdf

Specifications are subject to change without prior notice and any obligation on the part of the manufacturer.

SMC CORPORATION Zuazobidea 14, 01012, Vitoria-Gasteiz, Álava +34 945184100 +34 945184126 www.smc.eu emcmarketing@smc.smces.es