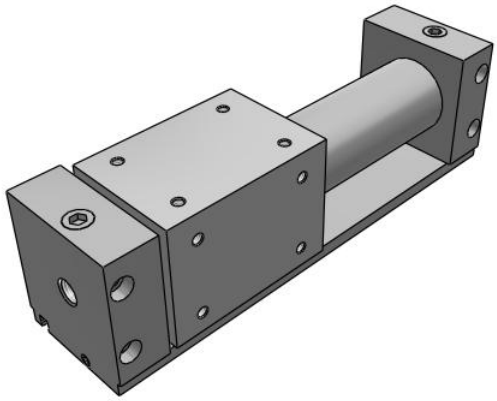

# CY3R, Magnetically Coupled Rodless Cylinder (with Switch Rail)

## CY3R40TF-100

Datasheet

## General series information

- Magnetically coupled rodless cylinder
- Direct mount type, with switch rail
- Bore sizes (mm): 6, 10, 15, 20, 25, 32, 40, 50, 63
- Maximum operating pressure: 0.7MPa
- Ambient temperature: -10 to 60°C
- Variety of auto switches available

*Magnetically coupled rodless cylinder*

## Standard specifications

| | |
|---|---|
| Piping | Standard |
| Bore Size | 40mm |
| Port Thread | TF (G) |
| Stroke | 100 |
| Auto Switch | No Switch |
| Lead Wire or Prewired Connector | 0.5m (Or None in the Case of No Switch) |
| Number | 2 pcs. (Or None in the Case of No Switch) |
| Maximum operating pressure | 0.7 MPa |
| Minimum operating pressure | 0.12 MPa |
| Proof pressure | 1.05 MPa |
| Type of cushioning | Rubber bumper on both ends |
| Lubrication | Non-lube |
| Fluid | Air |
| Ambient and fluid temperature | -10 - 60 °C |
| Stroke length tolerance | 0 to 250 st: +1.0 , 251 to 1000 st: +1.4, 1001 st to: +1.8 |
| F450 - Mounting | Direct mount type |
| F452 - Magnetic Holding Force | 922 N |

*Specifications are subject to change without prior notice and any obligation on the part of the manufacturer.*



**SMC CORPORATION** Zuazobidea 14, 01012, Vitoria-Gasteiz, Álava +34 945184100 +34 945184126 www.smc.eu support.marketingeurope@smc.com

| | |
|---|---|
| Piston speed | 50 - 500 mm/s |
| Mounting orientation | Horizontal, Inclined, Vertical |
| Weight | 2.166 Kg |

Specifications are subject to change without prior notice and any obligation on the part of the manufacturer.



SMC CORPORATION Zuazobidea 14, 01012, Vitoria-Gasteiz, Álava +34 945184100 +34 945184126 www.smc.eu support.marketingeurope@smc.com

# Dimensions

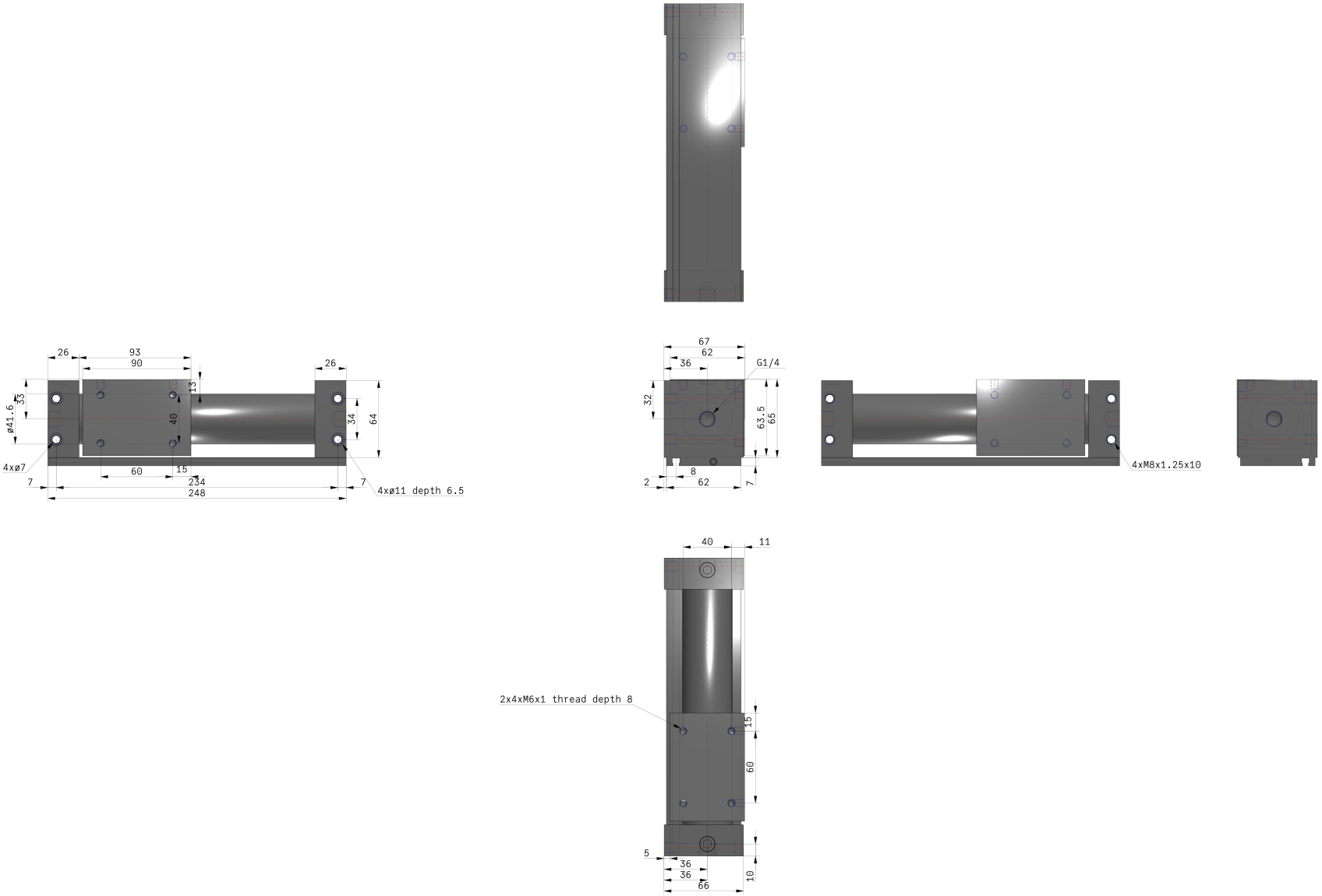


Specifications are subject to change without prior notice and any obligation on the part of the manufacturer.



SMC CORPORATION Zuazobidea 14, 01012, Vitoria-Gasteiz, Álava +34 945184100 +34 945184126 www.smc.eu support.marketingeurope@smc.com

# Constructions

## Both sides piping type

### CY3R15 to 63

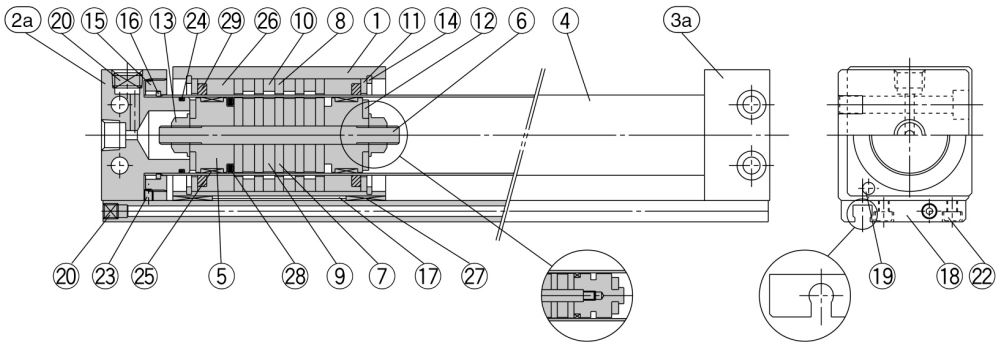


CY3R15, 20

CY3R15

### Component Parts

| No. | Description | Material | | Note | |
|---|---|---|---|---|---|
| 1 | **Body** | Aluminum alloy | | Hard anodized | |
| 2a | **End cover A** | Aluminum alloy | | Electroless nickel plated | |
| 2b | **End cover C** | Aluminum alloy | | Electroless nickel plated | |
| 3a | **End cover B** | Aluminum alloy | | Electroless nickel plated | |
| 3b | **End cover D** | Aluminum alloy | | Electroless nickel plated | |
| 4 | **Cylinder tube** | Stainless steel | | | |
| 5 | **Piston** | ø6 to ø15 | Brass | ø6 to ø15 | Electroless nickel plated |
| | | ø20 to ø63 | Aluminum alloy | ø20 to ø63 | Chromate |
| 6 | **Shaft** | Stainless steel | | | |
| 7 | **Piston side yoke** | Rolled steel plate | | Zinc chromated | |
| 8 | **External slider side yoke** | Rolled steel plate | | Zinc chromated | |
| 9 | **Magnet A** | Rare earth magnet | | | |
| 10 | **Magnet B** | Rare earth magnet | | | |
| 11 | **Spacer** | Aluminum alloy | | Black anodized (ø6: not available) | |
| 12 | **Bumper** | Urethane rubber | | | |
| 13 | **Piston nut** | Carbon steel | | Zinc chromate (ø6 to ø15: not available) | |
| 14 | **C type snap ring for hole** | Carbon tool steel | | Nickel plated | |
| 15 | **Attachment ring** | Aluminum alloy | | Chromate | |
| 16 | **C type snap ring for shaft** | Hard steel wire | | | |
| 17 | **Magnetic shielding plate** | Rolled steel plate | | Chromated (ø6, ø10: not available) | |
| 18 | **Switch rail** | Aluminum alloy | | White anodized | |
| 19 | **Magnet** | Rare earth magnet | | | |
| 20 | **Hexagon socket head plug** | Chromium steel | | Nickel plated | |

| No. | Description | Material | Note | |
|---|---|---|---|---|
| 21 | **Steel balls** | Chromium steel | ø40 | Hexagon socket head plug |
| | | | ø20, ø50, ø63 | None |
| 22 | **Hexagon socket head screw** | Chromium steel | Nickel plated | |
| 23 | **Hexagon socket head set screw** | Chromium steel | Nickel plated | |
| 24* | **Cylinder tube Gasket** | NBR | | |
| 25* | **Wear ring A** | Special resin | | |
| 26* | **Wear ring B** | Special resin | | |
| 27* | **Wear ring C** | Special resin | | |
| 28* | **Piston seal** | NBR | | |
| 29* | **Lubretainer** | Special resin | | |
| 30* | **Switch rail gasket** | NBR | Both sides piping type: None | |

* Seal kits are sets consisting of numbers 24 through 30. Order using the kit number corresponding to each bore size.

Specifications are subject to change without prior notice and any obligation on the part of the manufacturer.



SMC CORPORATION Zuazobidea 14, 01012, Vitoria-Gasteiz, Álava +34 945184100 +34 945184126 www.smc.eu support.marketingeurope@smc.com

## Additional information

| | |
|---|---|
| Catalogue | CY3-C_EU.pdf |
| Operation manuals | OM_CYBx_OM0001EN-A.pdf<br>OM_CY3R_OM0001H_EN.pdf |

Specifications are subject to change without prior notice and any obligation on the part of the manufacturer.



SMC CORPORATION Zuazobidea 14, 01012, Vitoria-Gasteiz, Álava +34 945184100 +34 945184126 www.smc.eu support.marketingeurope@smc.com