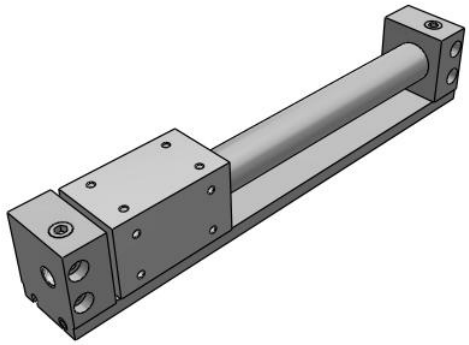

CY3R, Magnetically Coupled Rodless Cylinder (with Switch Rail)

CY3R20TF-150

Datasheet

General series information

- Magnetically coupled rodless cylinder
- Direct mount type, with switch rail
- Bore sizes (mm): 6, 10, 15, 20, 25, 32, 40, 50, 63
- Maximum operating pressure: 0.7MPa
- Ambient temperature: -10 to 60°C
- Variety of auto switches available

Magnetically coupled rodless cylinder

Standard specifications

Piping	Standard
Bore Size	20 mm
Port Thread	TF (G)
Stroke	150
Auto Switch	No Switch
Lead Wire or Pre-wired Connector	0.5 m (Or None in the Case of No Switch)
Number	2 pcs. (Or None in Case of No Switch)
Maximum operating pressure	0.7 MPa
Minimum operating pressure	0.16 MPa
Proof pressure	1.05 MPa
Type of cushioning	Rubber bumper on both ends
Lubrication	Non-lube
Fluid	Air
Ambient and fluid temperature	-10 - 60 °C
Stroke length tolerance	0 to 250 st: +1.0 , 251 to 1000 st: +1.4, 1001 st to: +1.8
F450 - Mounting	Direct mount type
F452 - Magnetic Holding Force	231 N

Specifications are subject to change without prior notice and any obligation on the part of the manufacturer.

SMC CORPORATION Zuazobidea 14, 01012, Vitoria-Gasteiz, Álava +34 945184100 +34 945184126 www.smc.eu support.marketingeurope@smc.com

Piston speed	50 - 500 mm/s
Mounting orientation	Horizontal, Inclined, Vertical
Weight	0.574 Kg

Specifications are subject to change without prior notice and any obligation on the part of the manufacturer.

SMC CORPORATION Zuazobidea 14, 01012, Vitoria-Gasteiz, Álava +34 945184100 +34 945184126 www.smc.eu support.marketingeurope@smc.com

Dimensions

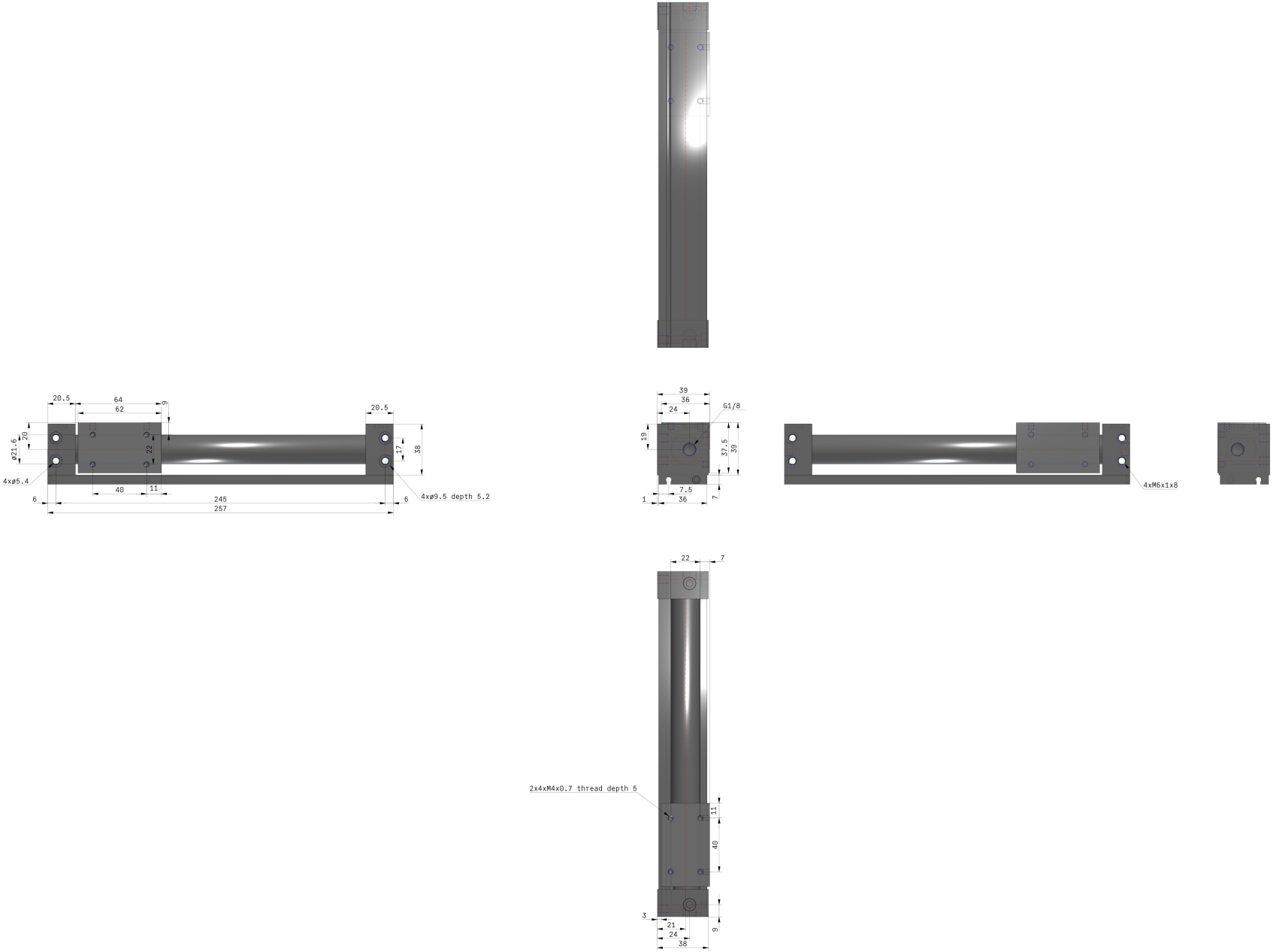

Specifications are subject to change without prior notice and any obligation on the part of the manufacturer.

SMC CORPORATION Zuazobidea 14, 01012, Vitoria-Gasteiz, Álava +34 945184100 +34 945184126 www.smc.eu support.marketingeurope@smc.com

Constructions

Both sides piping type

CY3R15 to 63

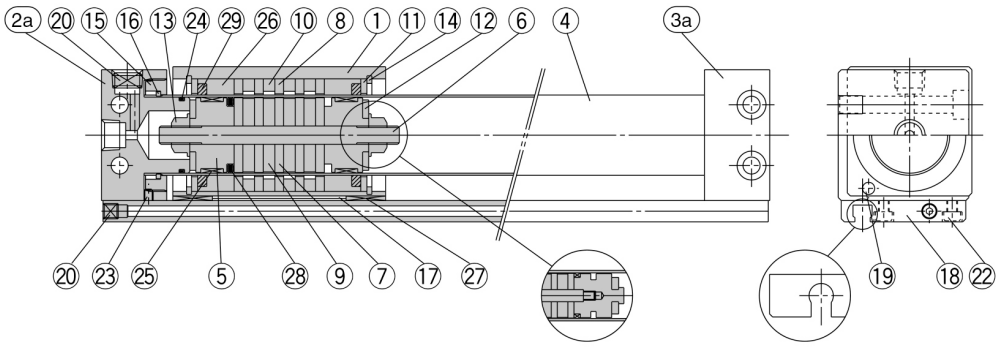

CY3R15, 20

CY3R15

Component Parts

No.	Description	Material		Note	
1	**Body**	Aluminum alloy		Hard anodized	
2a	**End cover A**	Aluminum alloy		Electroless nickel plated	
2b	**End cover C**	Aluminum alloy		Electroless nickel plated	
3a	**End cover B**	Aluminum alloy		Electroless nickel plated	
3b	**End cover D**	Aluminum alloy		Electroless nickel plated	
4	**Cylinder tube**	Stainless steel			
5	**Piston**	ø6 to ø15	Brass	ø6 to ø15	Electroless nickel plated
		ø20 to ø63	Aluminum alloy	ø20 to ø63	Chromate
6	**Shaft**	Stainless steel			
7	**Piston side yoke**	Rolled steel plate		Zinc chromated	
8	**External slider side yoke**	Rolled steel plate		Zinc chromated	
9	**Magnet A**	Rare earth magnet			
10	**Magnet B**	Rare earth magnet			
11	**Spacer**	Aluminum alloy		Black anodized (ø6: not available)	
12	**Bumper**	Urethane rubber			
13	**Piston nut**	Carbon steel		Zinc chromate (ø6 to ø15: not available)	
14	**C type snap ring for hole**	Carbon tool steel		Nickel plated	
15	**Attachment ring**	Aluminum alloy		Chromate	
16	**C type snap ring for shaft**	Hard steel wire			
17	**Magnetic shielding plate**	Rolled steel plate		Chromated (ø6, ø10: not available)	
18	**Switch rail**	Aluminum alloy		White anodized	
19	**Magnet**	Rare earth magnet			
20	**Hexagon socket head plug**	Chromium steel		Nickel plated	

No.	Description	Material	Note	
21	**Steel balls**	Chromium steel	ø40	Hexagon socket head plug
			ø20, ø50, ø63	None
22	**Hexagon socket head screw**	Chromium steel	Nickel plated	
23	**Hexagon socket head set screw**	Chromium steel	Nickel plated	
24*	**Cylinder tube Gasket**	NBR		
25*	**Wear ring A**	Special resin		
26*	**Wear ring B**	Special resin		
27*	**Wear ring C**	Special resin		
28*	**Piston seal**	NBR		
29*	**Lubretainer**	Special resin		
30*	**Switch rail gasket**	NBR	Both sides piping type: None	

* Seal kits are sets consisting of numbers 24 through 30. Order using the kit number corresponding to each bore size.

Specifications are subject to change without prior notice and any obligation on the part of the manufacturer.

SMC CORPORATION Zuazobidea 14, 01012, Vitoria-Gasteiz, Álava +34 945184100 +34 945184126 www.smc.eu support.marketingeurope@smc.com

Additional information

Catalogue	CY3-C_EU.pdf
Operation manuals	OM_CYBx_OM0001EN-A.pdf OM_CY3R_OM0001H_EN.pdf

Specifications are subject to change without prior notice and any obligation on the part of the manufacturer.

SMC CORPORATION Zuazobidea 14, 01012, Vitoria-Gasteiz, Álava +34 945184100 +34 945184126 www.smc.eu support.marketingeurope@smc.com