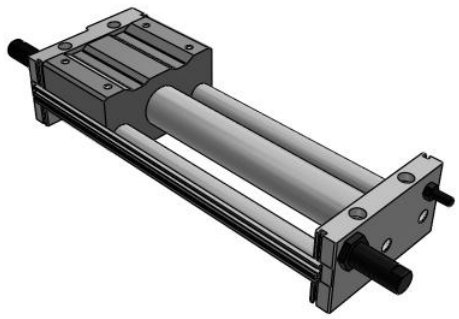

CY1S-Z, Magnetically Coupled Rodless Cylinder, Slide Bearing

CY1SG40TF-250BZ

Datasheet

General series information

- Slider style: slide bearing
- Bore sizes: 6, 10, 15, 20, 25, 32 and 40 (mm)
- Strokes from 15mm through 1500mm
- Improved auto switch mounting
- 3 options available for stroke adjustment
- Available with shock absorbers

Magnetically coupled rodless cylinder

Standard specifications

Piping	G (Centralized Piping Type)
Bore Size	40 mm
Port Thread	TF (G)
Stroke	250
Stopper Type	B [Shock Absorber/Adjustment Bolt [Metal Ended], Mounted on Both Sides]
Auto Switch	No Switch
Lead Wire or Prewired Connector	0.5m (Or None in the Case of No Switch)
Number	2 pcs. (Or None in the Case of No Switch)
Pressure medium	Compressed air
Maximum temperature of pressure medium	60 °C
Minimum temperature of pressure medium	-10 °C
Maximum operating pressure	0.7 MPa
Minimum operating pressure	0.18 MPa
Proof pressure	1.05 MPa
Maximum ambient temperature	60 °C
Minimum ambient temperature	-10 °C

Specifications are subject to change without prior notice and any obligation on the part of the manufacturer.

SMC CORPORATION Zuazobidea 14, 01012, Vitoria-Gasteiz, Álava +34 945184100 +34 945184126 www.smc.eu support.marketingeurope@smc.com

Number of pneumatic connections	2 pcs.
Pneumatic input connection	G 1/4
Mode of operation of drive	Double acting
Maximum piston speed	400 mm/s
Type of cushioning	Rubber Bumper
Maximum stroke reduction per side	15 mm
Max. Allowable Thrust	1961 N
F124- Max-operating-frequency	25 cycle/min
Max. Absorbed Energy	1961 J
Weight	6.994 Kg

Specifications are subject to change without prior notice and any obligation on the part of the manufacturer.

SMC CORPORATION Zuazobidea 14, 01012, Vitoria-Gasteiz, Álava +34 945184100 +34 945184126 www.smc.eu support.marketingeurope@smc.com

Dimensions

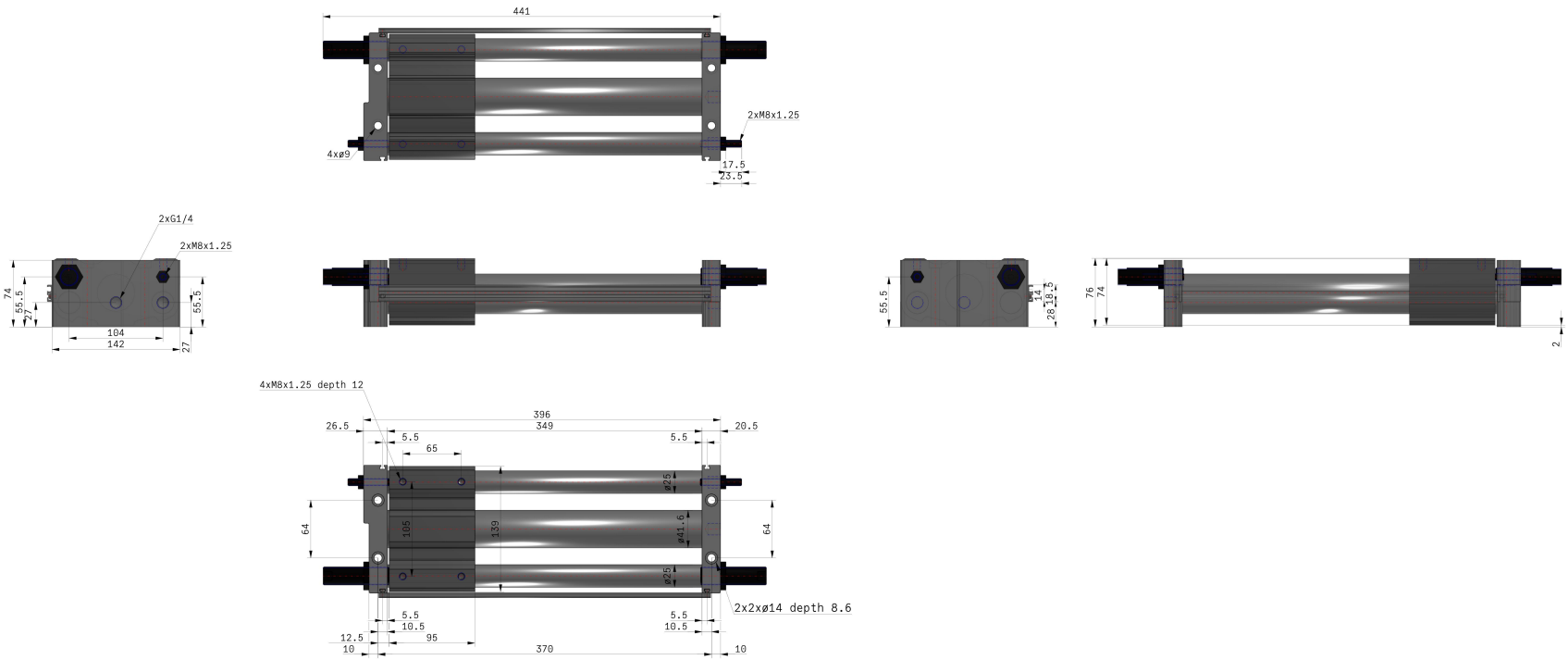

Specifications are subject to change without prior notice and any obligation on the part of the manufacturer.

SMC CORPORATION Zuazobidea 14, 01012, Vitoria-Gasteiz, Álava +34 945184100 +34 945184126 www.smc.eu support.marketingeurope@smc.com

Additional information

Catalogue CY1-Z-A_EU.pdf

Specifications are subject to change without prior notice and any obligation on the part of the manufacturer.

SMC CORPORATION Zuazobidea 14, 01012, Vitoria-Gasteiz, Álava +34 945184100 +34 945184126 www.smc.eu support.marketingeurope@smc.com