# CY1S-Z, Magnetically Coupled Rodless Cylinder, Slide Bearing

## CY1SG15-150BZ

Datasheet

## General series information

- Slider style: slide bearing
- Bore sizes: 6, 10, 15, 20, 25, 32 and 40 (mm)
- Strokes from 15mm through 1500mm
- Improved auto switch mounting
- 3 options available for stroke adjustment
- Available with shock absorbers

*Magnetically coupled rodless cylinder*

## Standard specifications

| | |
|---|---|
| Piping | G (Centralized Piping Type) |
| Bore Size | 15 mm |
| Port Thread | M Thread: Bore 6-15; Rc: Bore 20-40 |
| Stroke | 150 |
| Stopper Type | B [Shock Absorber/Adjustment Bolt [Metal Ended], Mounted on Both Sides] |
| Auto Switch | No Switch |
| Lead Wire or Pre-wired Connector | 0.5 m (Or None in the Case of No Switch) |
| Number | 2 pcs. (Or None in Case of No Switch) |
| Pressure medium | Compressed air |
| Maximum temperature of pressure medium | 60 °C |
| Minimum temperature of pressure medium | -10 °C |
| Maximum operating pressure | 0.7 MPa |
| Minimum operating pressure | 0.18 MPa |
| Proof pressure | 1.05 MPa |
| Maximum ambient temperature | 60 °C |
| Minimum ambient temperature | -10 °C |

*Specifications are subject to change without prior notice and any obligation on the part of the manufacturer.*



**SMC CORPORATION** Zuazobidea 14, 01012, Vitoria-Gasteiz, Álava +34 945184100 +34 945184126 www.smc.eu support.marketingeurope@smc.com

| | |
|---|---|
| Number of pneumatic connections | 2 pcs. |
| Pneumatic input connection | M5 x 0.8 |
| Mode of operation of drive | Double acting |
| Maximum piston speed | 400 mm/s |
| Type of cushioning | Rubber Bumper |
| Maximum stroke reduction per side | 6 mm |
| Max. Allowable Thrust | 245 N |
| F124- Max-operating-frequency | 80 cycle/min |
| Max. Absorbed Energy | 245 J |
| Weight | 1.086 Kg |

Specifications are subject to change without prior notice and any obligation on the part of the manufacturer.



SMC CORPORATION Zuazobidea 14, 01012, Vitoria-Gasteiz, Álava +34 945184100 +34 945184126 www.smc.eu support.marketingeurope@smc.com

# Dimensions

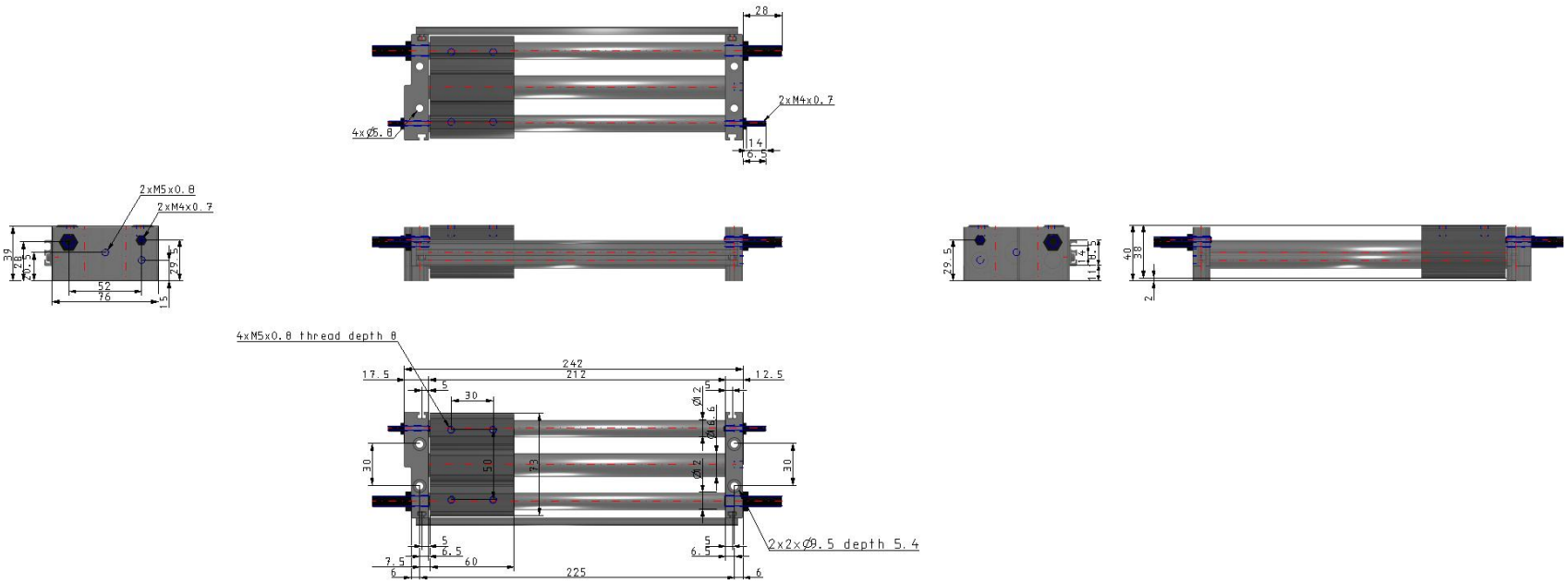


Specifications are subject to change without prior notice and any obligation on the part of the manufacturer.



**SMC CORPORATION** Zuazobidea 14, 01012, Vitoria-Gasteiz, Álava +34 945184100 +34 945184126 www.smc.eu support.marketingeurope@smc.com

## Additional information

Catalogue CY1-Z-A_EU.pdf

Specifications are subject to change without prior notice and any obligation on the part of the manufacturer.



SMC CORPORATION Zuazobidea 14, 01012, Vitoria-Gasteiz, Álava +34 945184100 +34 945184126 www.smc.eu support.marketingeurope@smc.com