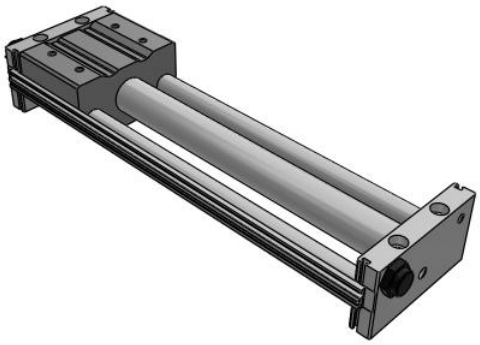

CY1S-Z, Magnetically Coupled Rodless Cylinder, Slide Bearing

CY1S32TF-300Z

Datasheet

General series information

- Slider style: slide bearing
- Bore sizes: 6, 10, 15, 20, 25, 32 and 40 (mm)
- Strokes from 15mm through 1500mm
- Improved auto switch mounting
- 3 options available for stroke adjustment
- Available with shock absorbers

Magnetically coupled rodless cylinder

Standard specifications

Piping	Bilateral Piping Type
Bore Size	32 mm
Port Thread	TF (G)
Stroke	300
Stopper Type	Bumper Bolt (Resin Tipped)
Auto Switch	No Switch
Lead Wire or Pre-wired Connector	0.5 m (Or None in the Case of No Switch)
Number	2 pcs. (Or None in Case of No Switch)
Pressure medium	Compressed air
Maximum temperature of pressure medium	60 °C
Minimum temperature of pressure medium	-10 °C
Maximum operating pressure	0.7 MPa
Minimum operating pressure	0.18 MPa
Proof pressure	1.05 MPa
Maximum ambient temperature	60 °C
Minimum ambient temperature	-10 °C
Number of pneumatic connections	2 pcs.

Specifications are subject to change without prior notice and any obligation on the part of the manufacturer.

SMC CORPORATION Zuazobidea 14, 01012, Vitoria-Gasteiz, Álava +34 945184100 +34 945184126 www.smc.eu support.marketingeurope@smc.com

Pneumatic input connection	G 1/8
Mode of operation of drive	Double acting
Maximum piston speed	400 mm/s
Type of cushioning	Rubber Bumper
Maximum stroke reduction per side	15 mm
Max. Allowable Thrust	1961 N
F124- Max-operating-frequency	25 cycle/min
Max. Absorbed Energy	1961 J
Weight	4.574 Kg

Specifications are subject to change without prior notice and any obligation on the part of the manufacturer.

SMC CORPORATION Zuazobidea 14, 01012, Vitoria-Gasteiz, Álava +34 945184100 +34 945184126 www.smc.eu support.marketingeurope@smc.com

Dimensions

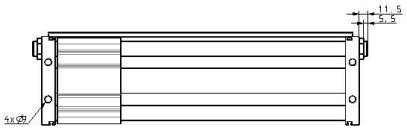

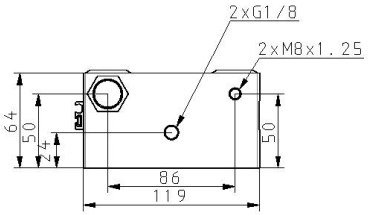

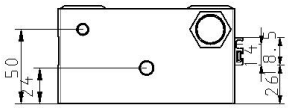

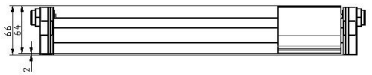

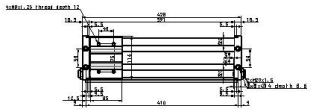

Specifications are subject to change without prior notice and any obligation on the part of the manufacturer.

SMC CORPORATION Zuazobidea 14, 01012, Vitoria-Gasteiz, Álava +34 945184100 +34 945184126 www.smc.eu support.marketingeurope@smc.com

Constructions

CY1S/Bilateral piping type
For ø6

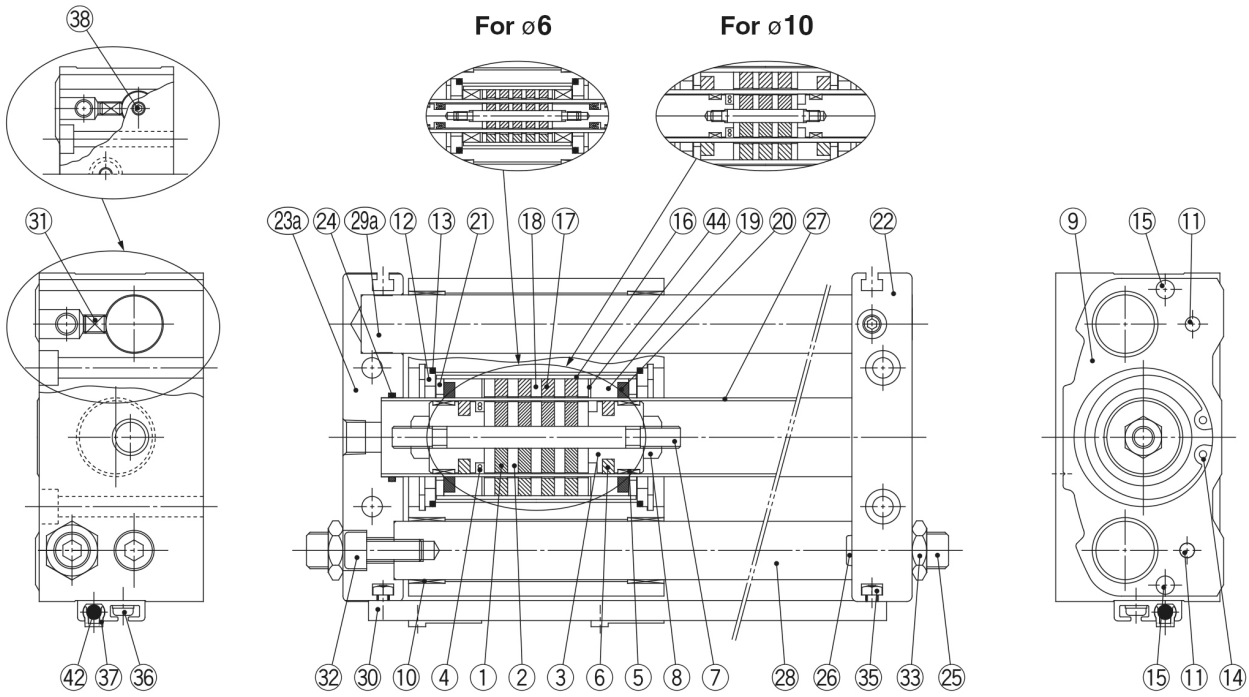

With bumper bolt

Component Parts

No.	Description	Material	Note
1	**Magnet A**	—	
2	**Piston side yoke**	Rolled steel	
3	**Piston**	Aluminium alloy	
4*	**Piston seal**	NBR	
5*	**Wear ring A**	Special resin	
6*	**Lub-retainer A**	Special resin	Except ø6, ø10
7	**Shaft**	Stainless steel	
8	**Piston nut**	Carbon steel	Except ø6 to ø15
9	**Slide block**	Aluminium alloy	
10	**Bushing**	Bearing alloy	
11	**Parallel pin**	Carbon steel	
12	**Slider spacer**	Rolled steel	
13*	**Slider gasket**	NBR	
14	**Retaining ring**	Carbon tool steel	
15	**Magnet for switch**	—	
16	**External slider tube**	Aluminium alloy	
17	**Magnet B**	—	
18	**External slider side yoke**	Rolled steel	
19*	**Wear ring B**	Special resin	
20*	**Lub-retainer B**	Special resin	Except ø6
21	**Spacer**	Rolled steel	Except ø6
22	**Plate A**	Aluminium alloy	
23a	**Plate C**	Aluminium alloy	Bilateral piping

No.	Description	Material	Note
24*	**Cylinder tube gasket**	NBR	
25	**Bumper bolt**	Chromium molybdenum steel	
26	**Bumper**	Urethane rubber	
27	**Cylinder tube**	Stainless steel	
28	**Guide shaft B**	Carbon steel	Hard chrome plated
29a	**Guide shaft C**	Carbon steel	Hard chrome plated
29b	**Guide shaft A**	Carbon steel	Hard chrome plated
30	**Switch rail**	Aluminium alloy	
31	**Hexagon socket head set screw**	Chromium molybdenum steel	
32	**Hexagon socket head cap screw**	Chromium molybdenum steel	
33	**Hexagon nut**	Chromium molybdenum steel	
34	**Hexagon nut**	Chromium molybdenum steel	
35	**Square nut**	Chromium molybdenum steel	
36	**Cross-recessed head machine screw with SW**	Chromium molybdenum steel	
37	**Switch spacer**	Special resin	
38	**Port plug**	Chromium molybdenum steel	ø6, Bilateral piping only
41	**Adjustment bolt**	Chromium molybdenum steel	
42	**Auto switch**	—	
43	**Shock absorber**	—	
44	**Liner**	Aluminium alloy	

Note 1) * denotes parts that are included in the seal kit.
Note 2) Auto switch and switch spacer are shipped together with the product, but not assembled.

Specifications are subject to change without prior notice and any obligation on the part of the manufacturer.

SMC CORPORATION Zuazobidea 14, 01012, Vitoria-Gasteiz, Álava +34 945184100 +34 945184126 www.smc.eu support.marketingeurope@smc.com

Additional information

Catalogue CY1-Z-A_EU.pdf

Specifications are subject to change without prior notice and any obligation on the part of the manufacturer.

SMC CORPORATION Zuazobidea 14, 01012, Vitoria-Gasteiz, Álava +34 945184100 +34 945184126 www.smc.eu support.marketingeurope@smc.com