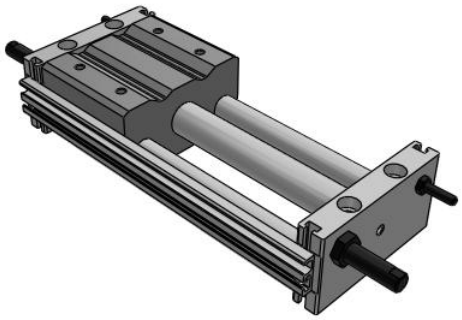

CY1S-Z, Magnetically Coupled Rodless Cylinder, Slide Bearing

CY1S15-100BZ

Datasheet

General series information

- Slider style: slide bearing
- Bore sizes: 6, 10, 15, 20, 25, 32 and 40 (mm)
- Strokes from 15mm through 1500mm
- Improved auto switch mounting
- 3 options available for stroke adjustment
- Available with shock absorbers

Magnetically coupled rodless cylinder

Standard specifications

Piping	Bilateral Piping Type
Bore Size	15 mm
Port Thread	M Thread: Bore 6-15; Rc: Bore 20-40
Stroke	100
Stopper Type	B [Shock Absorber/Adjustment Bolt [Metal Ended], Mounted on Both Sides]
Auto Switch	No Switch
Lead Wire or Prewired Connector	0.5m (Or None in the Case of No Switch)
Number	2 pcs. (Or None in the Case of No Switch)
Pressure medium	Compressed air
Maximum temperature of pressure medium	60 °C
Minimum temperature of pressure medium	-10 °C
Maximum operating pressure	0.7 MPa
Minimum operating pressure	0.18 MPa
Proof pressure	1.05 MPa
Maximum ambient temperature	60 °C
Minimum ambient temperature	-10 °C

Specifications are subject to change without prior notice and any obligation on the part of the manufacturer.

SMC CORPORATION Zuazobidea 14, 01012, Vitoria-Gasteiz, Álava +34 945184100 +34 945184126 www.smc.eu support.marketingeurope@smc.com

Number of pneumatic connections	2 pcs.
Pneumatic input connection	M5 x 0.8
Mode of operation of drive	Double acting
Maximum piston speed	400 mm/s
Type of cushioning	Rubber Bumper
Maximum stroke reduction per side	6 mm
Max. Allowable Thrust	245 N
F124- Max-operating-frequency	80 cycle/min
Max. Absorbed Energy	245 J

Specifications are subject to change without prior notice and any obligation on the part of the manufacturer.

SMC CORPORATION Zuazobidea 14, 01012, Vitoria-Gasteiz, Álava +34 945184100 +34 945184126 www.smc.eu support.marketingeurope@smc.com

Dimensions

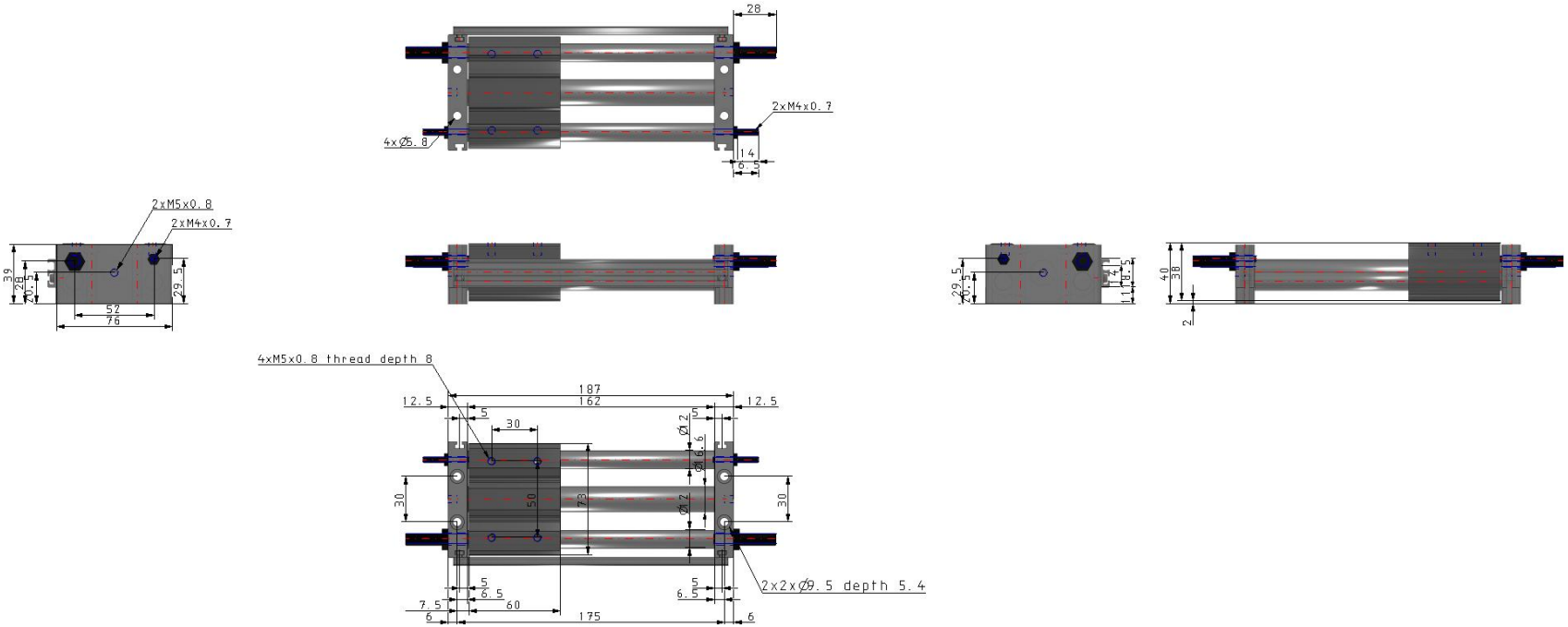

Specifications are subject to change without prior notice and any obligation on the part of the manufacturer.

SMC CORPORATION Zuazobidea 14, 01012, Vitoria-Gasteiz, Álava +34 945184100 +34 945184126 www.smc.eu support.marketingeurope@smc.com

Constructions

CY1S/Bilateral piping type
For ø6

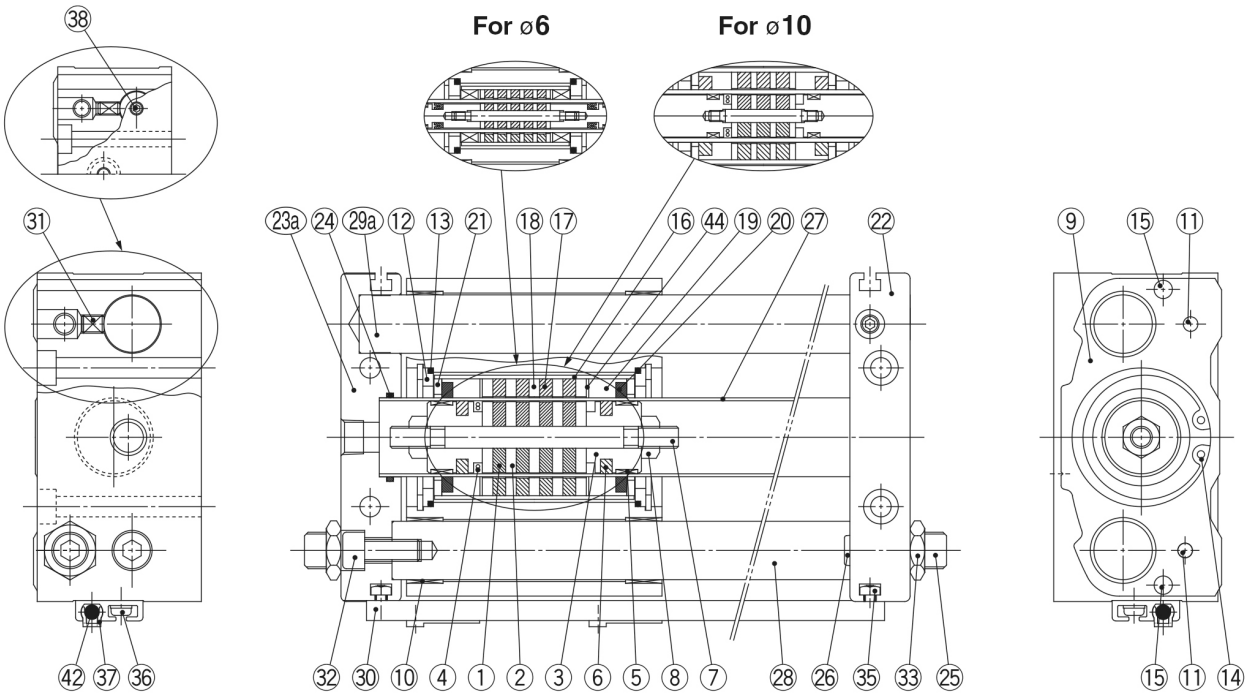

With bumper bolt

Component Parts

No.	Description	Material	Note
1	Magnet A	—	
2	Piston side yoke	Rolled steel	
3	Piston	Aluminium alloy	
4*	Piston seal	NBR	
5*	Wear ring A	Special resin	
6*	Lub-retainer A	Special resin	Except ø6, ø10
7	Shaft	Stainless steel	
8	Piston nut	Carbon steel	Except ø6 to ø15
9	Slide block	Aluminium alloy	
10	Bushing	Bearing alloy	
11	Parallel pin	Carbon steel	
12	Slider spacer	Rolled steel	
13*	Slider gasket	NBR	
14	Retaining ring	Carbon tool steel	
15	Magnet for switch	—	
16	External slider tube	Aluminium alloy	
17	Magnet B	—	
18	External slider side yoke	Rolled steel	
19*	Wear ring B	Special resin	
20*	Lub-retainer B	Special resin	Except ø6
21	Spacer	Rolled steel	Except ø6
22	Plate A	Aluminium alloy	
23a	Plate C	Aluminium alloy	Bilateral piping

No.	Description	Material	Note
24*	Cylinder tube gasket	NBR	
25	Bumper bolt	Chromium molybdenum steel	
26	Bumper	Urethane rubber	
27	Cylinder tube	Stainless steel	
28	Guide shaft B	Carbon steel	Hard chrome plated
29a	Guide shaft C	Carbon steel	Hard chrome plated
29b	Guide shaft A	Carbon steel	Hard chrome plated
30	Switch rail	Aluminium alloy	
31	Hexagon socket head set screw	Chromium molybdenum steel	
32	Hexagon socket head cap screw	Chromium molybdenum steel	
33	Hexagon nut	Chromium molybdenum steel	
34	Hexagon nut	Chromium molybdenum steel	
35	Square nut	Chromium molybdenum steel	
36	Cross-recessed head machine screw with SW	Chromium molybdenum steel	
37	Switch spacer	Special resin	
38	Port plug	Chromium molybdenum steel	ø6, Bilateral piping only
41	Adjustment bolt	Chromium molybdenum steel	
42	Auto switch	—	
43	Shock absorber	—	
44	Liner	Aluminium alloy	

Note 1) * denotes parts that are included in the seal kit.
Note 2) Auto switch and switch spacer are shipped together with the product, but not assembled.

Specifications are subject to change without prior notice and any obligation on the part of the manufacturer.

SMC CORPORATION Zuazobidea 14, 01012, Vitoria-Gasteiz, Álava +34 945184100 +34 945184126 www.smc.eu support.marketingeurope@smc.com

Additional information

Catalogue	CY1-Z-A_EU.pdf

Specifications are subject to change without prior notice and any obligation on the part of the manufacturer.

SMC CORPORATION Zuazobidea 14, 01012, Vitoria-Gasteiz, Álava +34 945184100 +34 945184126 www.smc.eu support.marketingeurope@smc.com