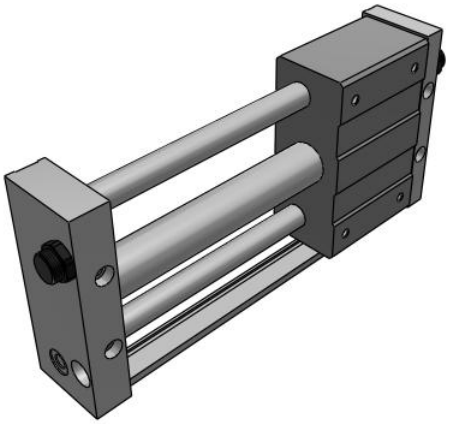

CY1L, Magnetically Coupled Rodless Cylinder, Ball Bushing

CY1L32TFH-200

Datasheet

General series information

- Slider style: ball bushing bearing
- Bore sizes: 6, 10, 15, 20, 25, 32, & 40 (mm)
- Strokes from 50mm through 1000mm
- Available with high or low magnetic holding force
- Available with shock absorbers
- Auto-switch capable

Magnetically coupled rodless cylinder

Standard specifications

Bore Size	32 mm
Port Thread	TF (G)
Magnetic Holding Force	H (Large Holding Force)
Stroke	200
Adjuster	Adjuster Bolt
Auto Switch	None
Lead Wire or Pre-wired Connector	0.5 m (Or None in the Case of No Switch)
Number	2 pcs. (Or None in Case of No Switch)
Maximum operating pressure	0.7 MPa
Minimum operating pressure	0.18 MPa
Proof pressure	1.05 MPa
Type of cushioning	Shock absorber/Rubber bumper
Lubrication	Non-lube
Fluid	Air
Ambient and fluid temperature	-10 - 60 °C
Stroke length tolerance	0 to 250 st: +1.0 mm , 251 to 1000 st: +1.4 mm, 1001 st to: +1.8 mm

Specifications are subject to change without prior notice and any obligation on the part of the manufacturer.

SMC CORPORATION Zuazobidea 14, 01012, Vitoria-Gasteiz, Álava +34 945184100 +34 945184126 www.smc.eu support.marketingeurope@smc.com

F452 - Magnetic Holding Force	588 N
Piston speed	50 - 500 mm/s
Mounting orientation	Unrestricted

Specifications are subject to change without prior notice and any obligation on the part of the manufacturer.

SMC CORPORATION Zuazobidea 14, 01012, Vitoria-Gasteiz, Álava +34 945184100 +34 945184126 www.smc.eu support.marketingeurope@smc.com

Dimensions

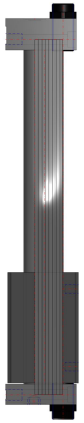

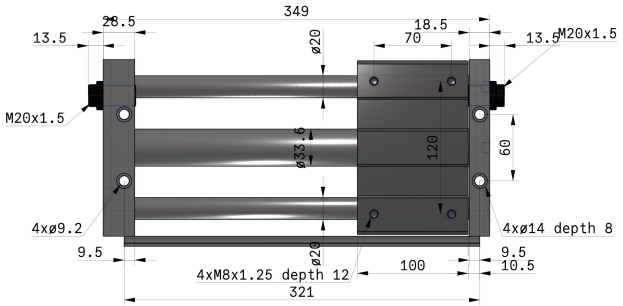

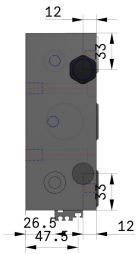

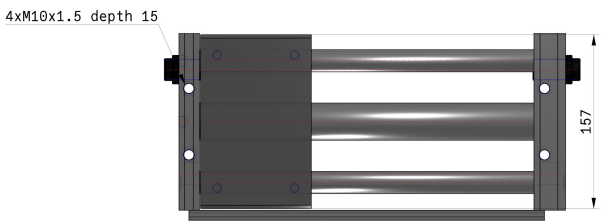

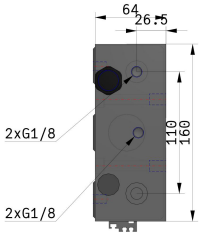

Specifications are subject to change without prior notice and any obligation on the part of the manufacturer.

SMC CORPORATION Zuazobidea 14, 01012, Vitoria-Gasteiz, Álava +34 945184100 +34 945184126 www.smc.eu support.marketingeurope@smc.com

Constructions

CY1L10 to 40

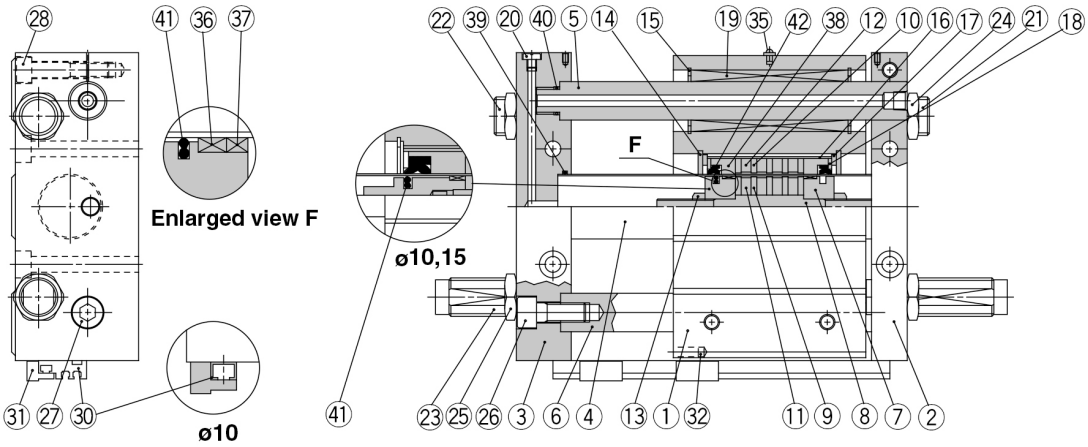

Component Parts

No.	Description	Material	Note
①	Slide block	Aluminum alloy	Hard anodized
②	Plate A	Aluminum alloy	Hard anodized
③	Plate B	Aluminum alloy	Hard anodized
④	Cylinder tube	Stainless steel	
⑤	Guide shaft A	Carbon steel	Hard chrome plated
⑥	Guide shaft B	Carbon steel	Hard chrome plated
⑦	Piston	Aluminum alloy (1)	Chromated
⑧	Shaft	Stainless steel	
⑨	Piston side yoke	Rolled steel plate	Zinc chromated
⑩	External slider side yoke	Rolled steel plate	Zinc chromated
⑪	Magnet A	Rare earth magnet	
⑫	Magnet B	Rare earth magnet	
⑬	Piston nut	Carbon steel	Zinc chromated ø25 to ø40
⑭	Snap ring	Carbon tool steel	Nickel plated
⑮	Snap ring	Carbon tool steel	Nickel plated
⑯	External slider tube	Aluminum alloy	
⑰	Slider spacer	Rolled steel plate	Nickel plated
⑱	Spacer	Rolled steel plate	Nickel plated
⑲	Ball bushing	—	
⑳	Plug	Brass	ø25, ø32, ø40 only
㉑	Adjustment bolt A	Chrome molybdenum steel	Nickel plated
㉒	Adjustment bolt B	Chrome molybdenum steel	Nickel plated
㉓	Shock absorber	—	
㉔	Hexagon nut	Carbon steel	Nickel plated
㉕	Hexagon nut	Carbon steel	Nickel plated
㉖	Hex socket head screw	Chrome molybdenum steel	Nickel plated
㉗	Hex socket head screw	Chrome molybdenum steel	Nickel plated
㉘	Hex socket head screw	Chrome molybdenum steel	Nickel plated

Note 1) Brass for ø6, ø10, ø15

No.	Description	Material	Note
㉙	Hexagon socket head screw	Chrome molybdenum steel	Nickel plated
㉚	Switch mounting rail	Aluminum alloy	
㉛	Auto switch	–	
㉜	Magnet for auto switch	Rare earth magnet	
㉝	Steel ball	–	ø6, ø10, ø15 only
㉞	Side cover	Carbon steel	ø6 only
㉟	Grease cup	Carbon steel	ø15 or larger
㊱*	Wear ring A	Special resin	
㊲*	Wear ring	Special resin	
㊳*	Wear ring B	Special resin	
㊴*	Cylinder tube gasket	NBR	
㊵*	Guide shaft gasket	NBR	
㊶*	Piston seal	NBR	
㊷*	Scraper	NBR	

Specifications are subject to change without prior notice and any obligation on the part of the manufacturer.

SMC CORPORATION Zuazobidea 14, 01012, Vitoria-Gasteiz, Álava +34 945184100 +34 945184126 www.smc.eu support.marketingeurope@smc.com

Additional information

Catalogue	CY1_EU.pdf
Operation manuals	OM_CY1L_OM0002C_EN.pdf

Specifications are subject to change without prior notice and any obligation on the part of the manufacturer.

SMC CORPORATION Zuazobidea 14, 01012, Vitoria-Gasteiz, Álava +34 945184100 +34 945184126 www.smc.eu support.marketingeurope@smc.com