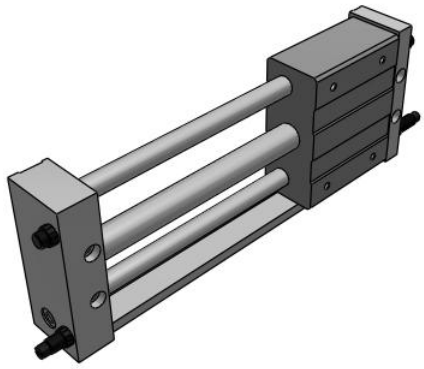

# CY1L, Magnetically Coupled Rodless Cylinder, Ball Bushing

## CY1L15H-150B

Datasheet

## General series information

- Slider style: ball bushing bearing
- Bore sizes: 6, 10, 15, 20, 25, 32, & 40 (mm)
- Strokes from 50mm through 1000mm
- Available with high or low magnetic holding force
- Available with shock absorbers
- Auto-switch capable

*Magnetically coupled rodless cylinder*

## Standard specifications

| | |
|---|---|
| Bore Size | 15 mm |
| Port Thread | Rc (or M Thread for 6 to 15 Bore) |
| Magnetic Holding Force | H (Large Holding Force) |
| Stroke | 150 |
| Adjuster | B (Shock Absorber (2 pcs.)) |
| Auto Switch | None |
| Lead Wire or Pre-wired Connector | 0.5 m (Or None in the Case of No Switch) |
| Number | 2 pcs. (Or None in Case of No Switch) |
| Maximum operating pressure | 0.7 MPa |
| Minimum operating pressure | 0.18 MPa |
| Proof pressure | 1.05 MPa |
| Type of cushioning | Shock absorber/Rubber bumper |
| Lubrication | Non-lube |
| Fluid | Air |
| Ambient and fluid temperature | -10 - 60 °C |
| Stroke length tolerance | 0 to 250 st: +1.0 mm , 251 to 1000 st: +1.4 mm, 1001 st to: +1.8 mm |

*Specifications are subject to change without prior notice and any obligation on the part of the manufacturer.*



**SMC CORPORATION** Zuazobidea 14, 01012, Vitoria-Gasteiz, Álava +34 945184100 +34 945184126 www.smc.eu support.marketingeurope@smc.com

| | |
|---|---|
| F452 - Magnetic Holding Force | 137 N |
| Piston speed | 50 - 500 mm/s |
| Mounting orientation | Unrestricted |
| Weight | 1.442 Kg |

Specifications are subject to change without prior notice and any obligation on the part of the manufacturer.



SMC CORPORATION Zuazobidea 14, 01012, Vitoria-Gasteiz, Álava +34 945184100 +34 945184126 www.smc.eu support.marketingeurope@smc.com

# Dimensions

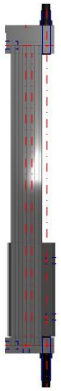

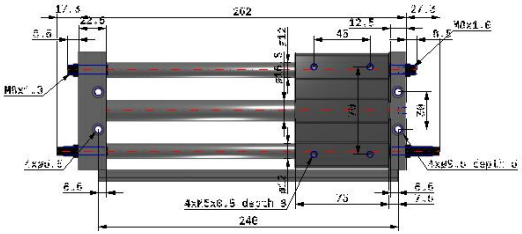


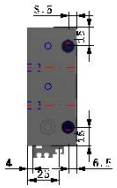


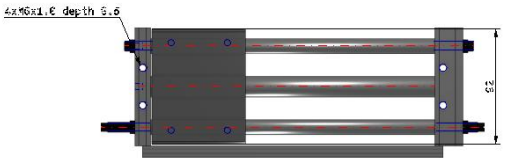


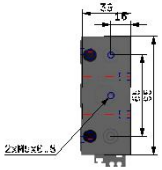

Specifications are subject to change without prior notice and any obligation on the part of the manufacturer.



SMC CORPORATION Zuazobidea 14, 01012, Vitoria-Gasteiz, Álava +34 945184100 +34 945184126 www.smc.eu support.marketingeurope@smc.com

# Constructions

## CY1L10 to 40

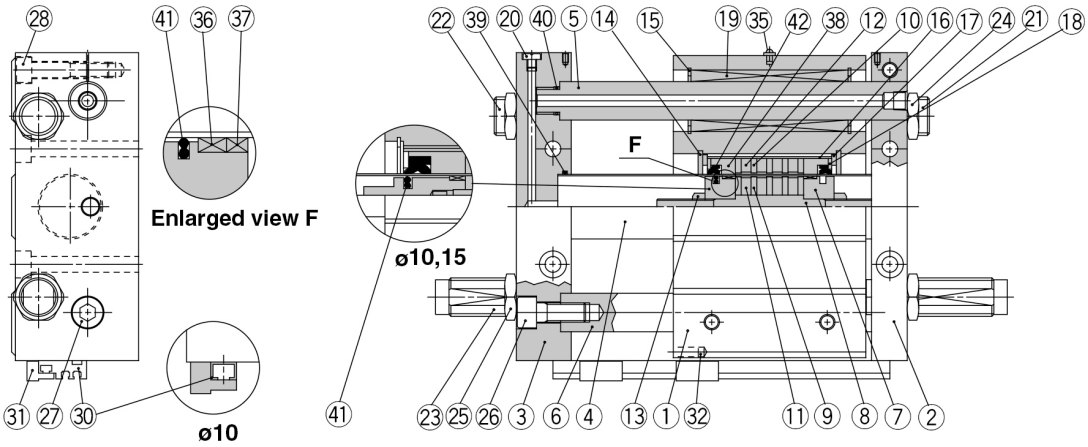


### Component Parts

| No. | Description | Material | Note |
|---|---|---|---|
| ① | Slide block | Aluminum alloy | Hard anodized |
| ② | Plate A | Aluminum alloy | Hard anodized |
| ③ | Plate B | Aluminum alloy | Hard anodized |
| ④ | Cylinder tube | Stainless steel | |
| ⑤ | Guide shaft A | Carbon steel | Hard chrome plated |
| ⑥ | Guide shaft B | Carbon steel | Hard chrome plated |
| ⑦ | Piston | Aluminum alloy (1) | Chromated |
| ⑧ | Shaft | Stainless steel | |
| ⑨ | Piston side yoke | Rolled steel plate | Zinc chromated |
| ⑩ | External slider side yoke | Rolled steel plate | Zinc chromated |
| ⑪ | Magnet A | Rare earth magnet | |
| ⑫ | Magnet B | Rare earth magnet | |
| ⑬ | Piston nut | Carbon steel | Zinc chromated ø25 to ø40 |
| ⑭ | Snap ring | Carbon tool steel | Nickel plated |
| ⑮ | Snap ring | Carbon tool steel | Nickel plated |
| ⑯ | External slider tube | Aluminum alloy | |
| ⑰ | Slider spacer | Rolled steel plate | Nickel plated |
| ⑱ | Spacer | Rolled steel plate | Nickel plated |
| ⑲ | Ball bushing | — | |
| ⑳ | Plug | Brass | ø25, ø32, ø40 only |
| ㉑ | Adjustment bolt A | Chrome molybdenum steel | Nickel plated |
| ㉒ | Adjustment bolt B | Chrome molybdenum steel | Nickel plated |
| ㉓ | Shock absorber | — | |
| ㉔ | Hexagon nut | Carbon steel | Nickel plated |
| ㉕ | Hexagon nut | Carbon steel | Nickel plated |
| ㉖ | Hex socket head screw | Chrome molybdenum steel | Nickel plated |
| ㉗ | Hex socket head screw | Chrome molybdenum steel | Nickel plated |
| ㉘ | Hex socket head screw | Chrome molybdenum steel | Nickel plated |

Note 1) Brass for ø6, ø10, ø15

| No. | Description | Material | Note |
|---|---|---|---|
| ㉙ | Hexagon socket head screw | Chrome molybdenum steel | Nickel plated |
| ㉚ | Switch mounting rail | Aluminum alloy | |
| ㉛ | Auto switch | – | |
| ㉜ | Magnet for auto switch | Rare earth magnet | |
| ㉝ | Steel ball | – | ø6, ø10, ø15 only |
| ㉞ | Side cover | Carbon steel | ø6 only |
| ㉟ | Grease cup | Carbon steel | ø15 or larger |
| ㊱* | Wear ring A | Special resin | |
| ㊲* | Wear ring | Special resin | |
| ㊳* | Wear ring B | Special resin | |
| ㊴* | Cylinder tube gasket | NBR | |
| ㊵* | Guide shaft gasket | NBR | |
| ㊶* | Piston seal | NBR | |
| ㊷* | Scraper | NBR | |

Specifications are subject to change without prior notice and any obligation on the part of the manufacturer.



SMC CORPORATION Zuazobidea 14, 01012, Vitoria-Gasteiz, Álava +34 945184100 +34 945184126 www.smc.eu support.marketingeurope@smc.com

## Additional information

| | |
|---|---|
| Catalogue | CY1_EU.pdf |
| Operation manuals | OM_CY1L_OM0002C_EN.pdf |

Specifications are subject to change without prior notice and any obligation on the part of the manufacturer.



SMC CORPORATION Zuazobidea 14, 01012, Vitoria-Gasteiz, Álava +34 945184100 +34 945184126 www.smc.eu support.marketingeurope@smc.com