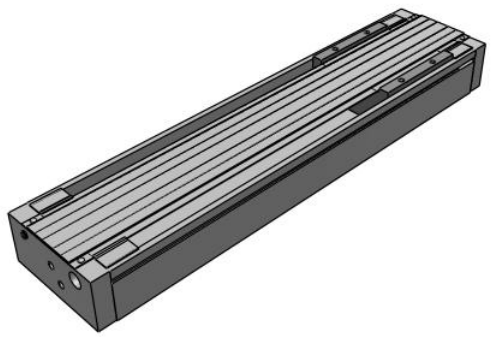

# CY1H, Magnetically Coupled Rodless Cylinder, High Precision Guide

## CY1HT32-400

Datasheet

## General series information

- High precision guide
- Bore sizes: 6, 10, 15, 20, 25, & 32(mm)
- Strokes from 100mm through 1000mm
- Available with shock absorbers
- Auto-switch capable

*Magnetically coupled rodless cylinder*

## Standard specifications

| | |
|---|---|
| Guide Suffix | T (2 Axes) |
| Bore Size | 32 mm |
| Stroke | 400 mm |
| Adjuster | Adjuster Bolt |
| Auto Switch | No Switch |
| Lead Wire or Pre-wired Connector | 0.5 m (Or None in the Case of No Switch) |
| Number | 2 pcs. (Or None in Case of No Switch) |
| Maximum operating pressure | 0.7 MPa |
| Minimum operating pressure | 0.2 MPa |
| Proof pressure | 1.05 MPa |
| Type of cushioning | Urethane bumpers on both sides (standard), Shock absorber (option) |
| Lubrication | Non-lube |
| Fluid | Air |
| Ambient and fluid temperature | -10 - 60 °C |
| Stroke length tolerance | 0 to 1.8 mm |
| F452 - Magnetic Holding Force | 588 N |
| Piston speed | 70 - 1000 mm/s |

*Specifications are subject to change without prior notice and any obligation on the part of the manufacturer.*



**SMC CORPORATION** Zuazobidea 14, 01012, Vitoria-Gasteiz, Álava +34 945184100 +34 945184126 www.smc.eu support.marketingeurope@smc.com

| | |
|---|---|
| Action | Double Acting |
| Piping | Centralized |
| Piping port size | Rc (PT) 1/8 |
| Weight | 11.868 Kg |

Specifications are subject to change without prior notice and any obligation on the part of the manufacturer.



SMC CORPORATION Zuazobidea 14, 01012, Vitoria-Gasteiz, Álava +34 945184100 +34 945184126 www.smc.eu support.marketingeurope@smc.com

# Dimensions

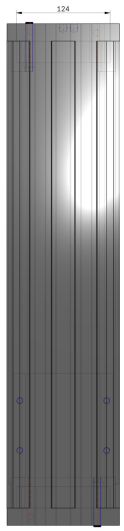

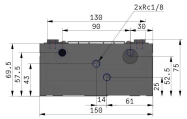

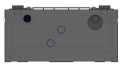

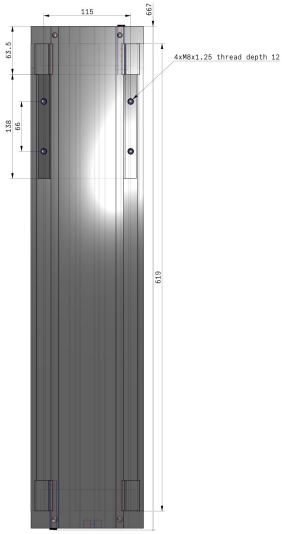


Specifications are subject to change without prior notice and any obligation on the part of the manufacturer.



SMC CORPORATION Zuazobidea 14, 01012, Vitoria-Gasteiz, Álava +34 945184100 +34 945184126 www.smc.eu support.marketingeurope@smc.com

# Constructions

## Dual axis/CY1HT

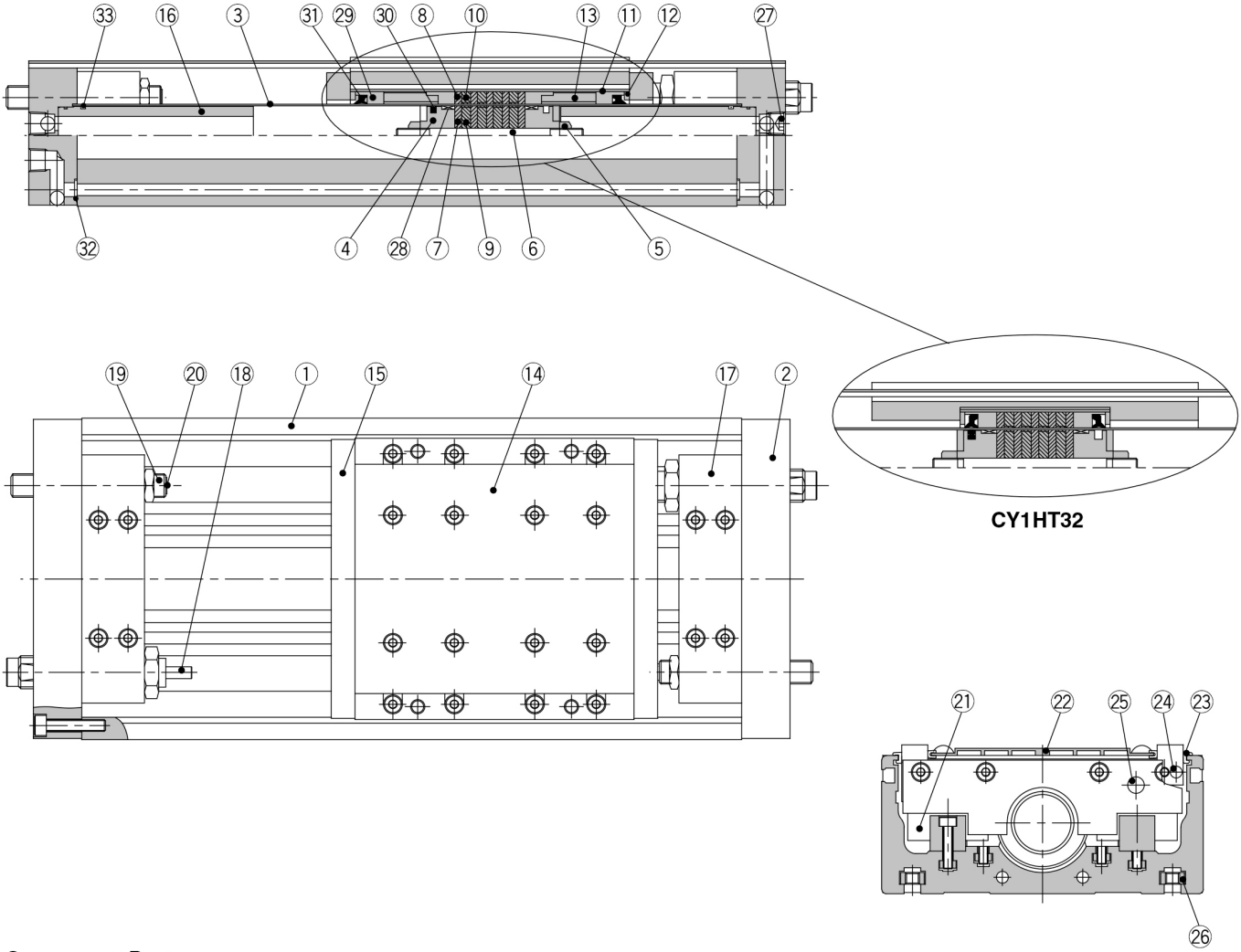


### Component Parts

| No. | Description | Material | Qty. | Note |
|---|---|---|---|---|
| ① | Body | Aluminum alloy | 1 | Hard anodized |
| ② | Plate | Aluminum alloy | 2 | Hard anodized |
| ③ | Cylinder tube | Stainless steel | 1 | |
| ④ | Piston | Aluminum alloy | 2 | Chromated |
| ⑤ | Piston nut | Carbon steel | 2 | Zinc chromated |
| ⑥ | Shaft | Stainless steel | 1 | |
| ⑦ | Piston side yoke | Rolled steel plate | 5 | Zinc chromated |
| ⑧ | External slider side yoke | Rolled steel plate | 5 | Zinc chromated |
| ⑨ | Magnet A | Rare earth magnet | 4 | |
| ⑩ | Magnet B | Rare earth magnet | 4 | |
| ⑪ | External slider tube | Aluminum alloy | 1 | |
| ⑫ | Spacer | Rolled steel plate | 2 | Nickel plated |
| ⑬ | Space ring | Aluminum alloy | 2 | Chromated (except CY1HT32) |
| ⑭ | Slide table | Aluminum alloy | 1 | Hard anodized |
| ⑮ | Side plate | Aluminum alloy | 2 | Hard anodized (except CY1HT32) |
| ⑯ | Internal stopper | Aluminum alloy | 2 | Anodized |
| ⑰ | Stopper | Aluminum alloy | 2 | Anodized |

| No. | Description | Material | Qty. | Note |
|---|---|---|---|---|
| ⑱ | Shock absorber | — | 2 | Series RB |
| ⑲ | Adjustment bolt | Chrome molybdenum steel | 2 | Nickel plated |
| ⑳ | Adjustment bumper | Urethane rubber | 2 | |
| ㉑ | Linear guide | — | 2 | |
| ㉒ | Top cover | Aluminum alloy | 1 | Hard anodized |
| ㉓ | Dust cover | Special resin | 4 | |
| ㉔ | Magnet (for auto switch) | Rare earth magnet | 2(4) | ( ) for CY1HT32 |
| ㉕ | Parallel pin | Stainless steel | 2 | |
| ㉖ | Square nut for body mounting | Carbon steel | 4 | Nickel plated |
| ㉗ | Hex socket taper plug | Carbon steel | 2 | Nickel plated |
| ㉘* | Wear ring A | Special resin | 2 | |
| ㉙* | Wear ring B | Special resin | 4(2) | ( ) for CY1HT32 |
| ㉚* | Piston seal | NBR | 1 | |
| ㉛* | Scraper | NBR | 2 | |
| ㉜* | O ring | NBR | 4 | |
| ㉝* | O ring | NBR | 2 | |

Specifications are subject to change without prior notice and any obligation on the part of the manufacturer.



SMC CORPORATION Zuazobidea 14, 01012, Vitoria-Gasteiz, Álava +34 945184100 +34 945184126 www.smc.eu support.marketingeurope@smc.com

## Additional information

Catalogue CY1_EU.pdf

Specifications are subject to change without prior notice and any obligation on the part of the manufacturer.



SMC CORPORATION Zuazobidea 14, 01012, Vitoria-Gasteiz, Álava +34 945184100 +34 945184126 www.smc.eu support.marketingeurope@smc.com