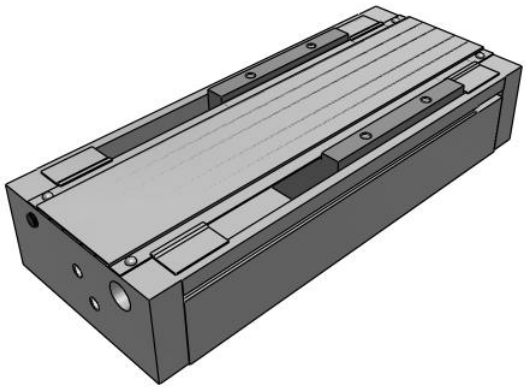

CY1H, Magnetically Coupled Rodless Cylinder, High Precision Guide

CY1HT32-100

Datasheet

General series information

- High precision guide
- Bore sizes: 6, 10, 15, 20, 25, & 32(mm)
- Strokes from 100mm through 1000mm
- Available with shock absorbers
- Auto-switch capable

Magnetically coupled rodless cylinder

Standard specifications

Guide Suffix	T (2 Axes)
Bore Size	32 mm
Stroke	100 mm
Adjuster	Adjuster Bolt
Auto Switch	No Switch
Lead Wire or Pre-wired Connector	0.5 m (Or None in the Case of No Switch)
Number	2 pcs. (Or None in Case of No Switch)
Maximum operating pressure	0.7 MPa
Minimum operating pressure	0.2 MPa
Proof pressure	1.05 MPa
Type of cushioning	Urethane bumpers on both sides (standard), Shock absorber (option)
Lubrication	Non-lube
Fluid	Air
Ambient and fluid temperature	-10 - 60 °C
Stroke length tolerance	0 to 1.8 mm
F452 - Magnetic Holding Force	588 N
Piston speed	70 - 1000 mm/s

Specifications are subject to change without prior notice and any obligation on the part of the manufacturer.

SMC CORPORATION Zuazobidea 14, 01012, Vitoria-Gasteiz, Álava +34 945184100 +34 945184126 www.smc.eu support.marketingeurope@smc.com

Action	Double Acting
Piping	Centralized
Piping port size	Rc (PT) 1/8

Specifications are subject to change without prior notice and any obligation on the part of the manufacturer.

SMC CORPORATION Zuazobidea 14, 01012, Vitoria-Gasteiz, Álava +34 945184100 +34 945184126 www.smc.eu support.marketingeurope@smc.com

Dimensions

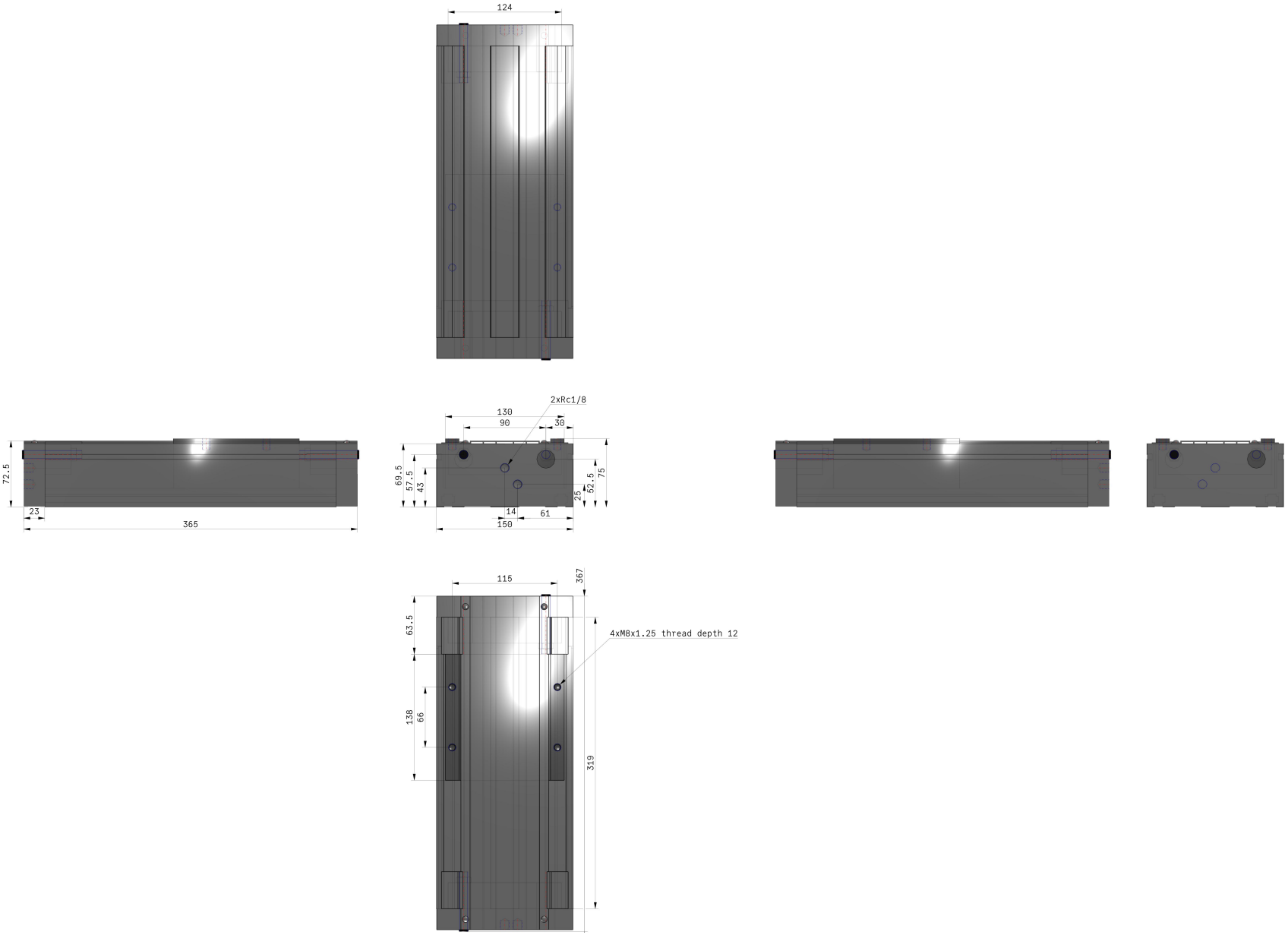

Specifications are subject to change without prior notice and any obligation on the part of the manufacturer.

SMC CORPORATION Zuazobidea 14, 01012, Vitoria-Gasteiz, Álava +34 945184100 +34 945184126 www.smc.eu support.marketingeurope@smc.com

Constructions

Dual axis/CY1HT

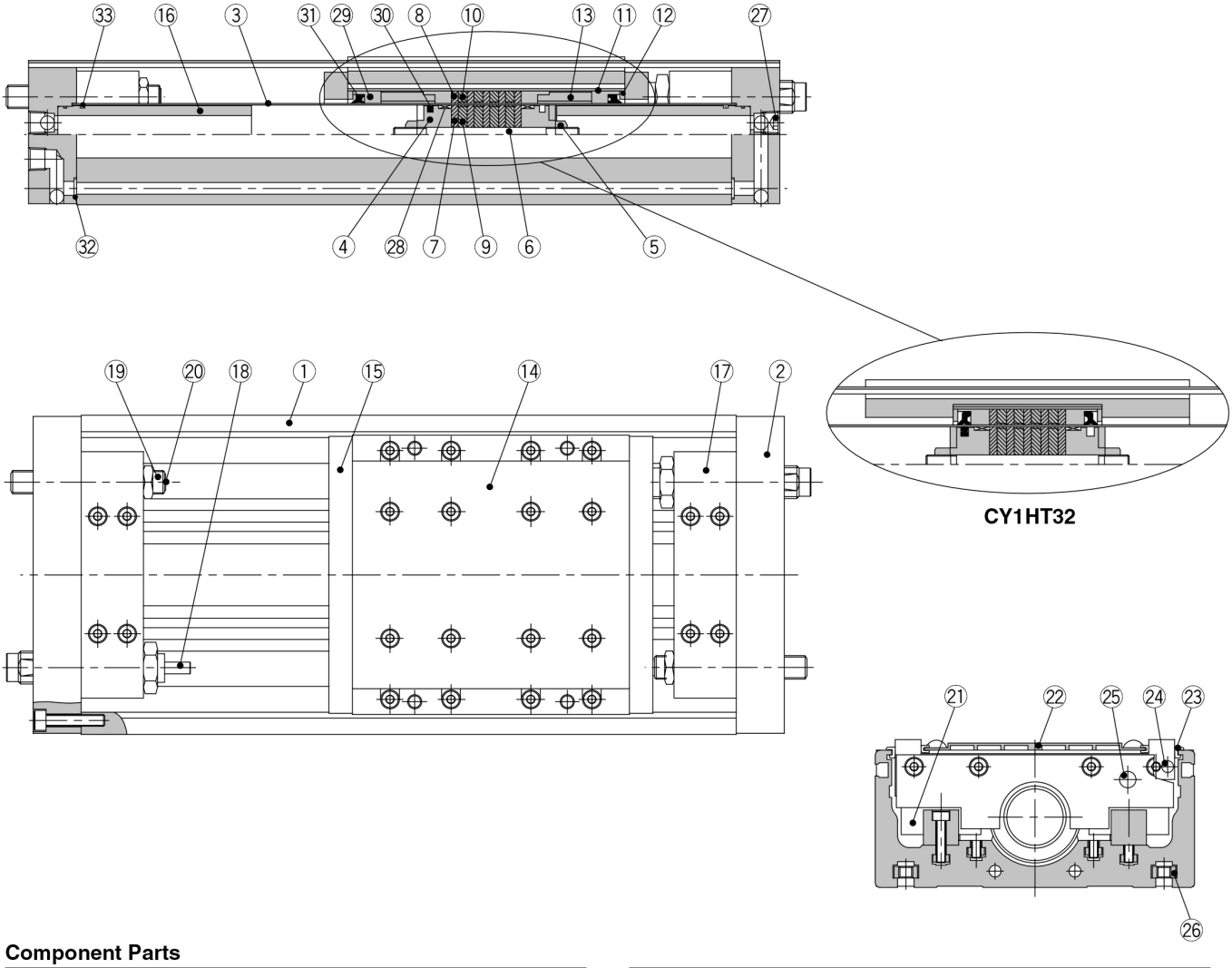

Component Parts

No.	Description	Material	Qty.	Note
①	Body	Aluminum alloy	1	Hard anodized
②	Plate	Aluminum alloy	2	Hard anodized
③	Cylinder tube	Stainless steel	1	
④	Piston	Aluminum alloy	2	Chromated
⑤	Piston nut	Carbon steel	2	Zinc chromated
⑥	Shaft	Stainless steel	1	
⑦	Piston side yoke	Rolled steel plate	5	Zinc chromated
⑧	External slider side yoke	Rolled steel plate	5	Zinc chromated
⑨	Magnet A	Rare earth magnet	4	
⑩	Magnet B	Rare earth magnet	4	
⑪	External slider tube	Aluminum alloy	1	
⑫	Spacer	Rolled steel plate	2	Nickel plated
⑬	Space ring	Aluminum alloy	2	Chromated (except CY1HT32)
⑭	Slide table	Aluminum alloy	1	Hard anodized
⑮	Side plate	Aluminum alloy	2	Hard anodized (except CY1HT32)
⑯	Internal stopper	Aluminum alloy	2	Anodized
⑰	Stopper	Aluminum alloy	2	Anodized

No.	Description	Material	Qty.	Note
⑱	Shock absorber	—	2	Series RB
⑲	Adjustment bolt	Chrome molybdenum steel	2	Nickel plated
⑳	Adjustment bumper	Urethane rubber	2	
㉑	Linear guide	—	2	
㉒	Top cover	Aluminum alloy	1	Hard anodized
㉓	Dust cover	Special resin	4	
㉔	Magnet (for auto switch)	Rare earth magnet	2(4)	( ) for CY1HT32
㉕	Parallel pin	Stainless steel	2	
㉖	Square nut for body mounting	Carbon steel	4	Nickel plated
㉗	Hex socket taper plug	Carbon steel	2	Nickel plated
㉘*	Wear ring A	Special resin	2	
㉙*	Wear ring B	Special resin	4(2)	( ) for CY1HT32
㉚*	Piston seal	NBR	1	
㉛*	Scraper	NBR	2	
㉜*	O ring	NBR	4	
㉝*	O ring	NBR	2	

Specifications are subject to change without prior notice and any obligation on the part of the manufacturer.

SMC CORPORATION Zuazobidea 14, 01012, Vitoria-Gasteiz, Álava +34 945184100 +34 945184126 www.smc.eu support.marketingeurope@smc.com

Additional information

Catalogue CY1_EU.pdf

Specifications are subject to change without prior notice and any obligation on the part of the manufacturer.

SMC CORPORATION Zuazobidea 14, 01012, Vitoria-Gasteiz, Álava +34 945184100 +34 945184126 www.smc.eu support.marketingeurope@smc.com