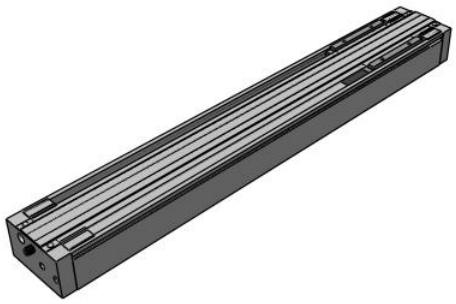

CY1H, Magnetically Coupled Rodless Cylinder, High Precision Guide

CY1H25-500

Datasheet

General series information

- High precision guide
- Bore sizes: 6, 10, 15, 20, 25, & 32(mm)
- Strokes from 100mm through 1000mm
- Available with shock absorbers
- Auto-switch capable

Magnetically coupled rodless cylinder

Standard specifications

Guide Suffix	1 Axis
Bore Size	25 mm
Stroke	500 mm
Adjuster	Adjuster Bolt
Auto Switch	No Switch
Lead Wire or Pre-wired Connector	0.5 m (Or None in the Case of No Switch)
Number	2 pcs. (Or None in Case of No Switch)
Maximum operating pressure	0.7 MPa
Minimum operating pressure	0.2 MPa
Proof pressure	1.05 MPa
Type of cushioning	Urethane bumpers on both sides (standard), Shock absorber (option)
Lubrication	Non-lube
Fluid	Air
Ambient and fluid temperature	-10 - 60 °C
Stroke length tolerance	0 to 1.8 mm
F452 - Magnetic Holding Force	363 N
Piston speed	70 - 1000 mm/s

Specifications are subject to change without prior notice and any obligation on the part of the manufacturer.

SMC CORPORATION Zuazobidea 14, 01012, Vitoria-Gasteiz, Álava +34 945184100 +34 945184126 www.smc.eu support.marketingeurope@smc.com

Action	Double Acting
Piping	Centralized
Piping port size	Rc (PT) 1/8
Weight	7.344 Kg

Specifications are subject to change without prior notice and any obligation on the part of the manufacturer.

SMC CORPORATION Zuazobidea 14, 01012, Vitoria-Gasteiz, Álava +34 945184100 +34 945184126 www.smc.eu support.marketingeurope@smc.com

Dimensions

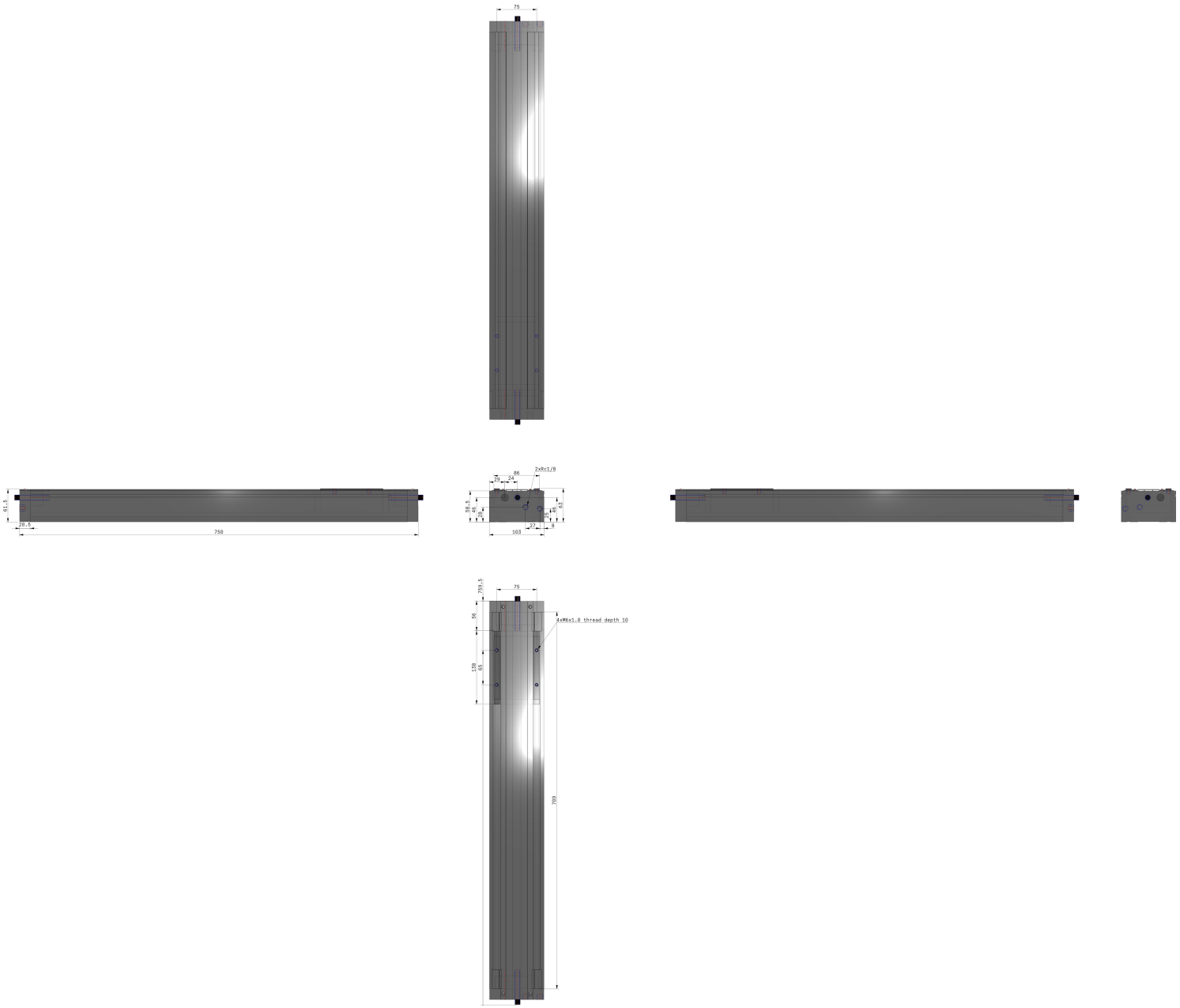

Specifications are subject to change without prior notice and any obligation on the part of the manufacturer.

SMC CORPORATION Zuazobidea 14, 01012, Vitoria-Gasteiz, Álava +34 945184100 +34 945184126 www.smc.eu support.marketingeurope@smc.com

Constructions

Single axis/CY1H

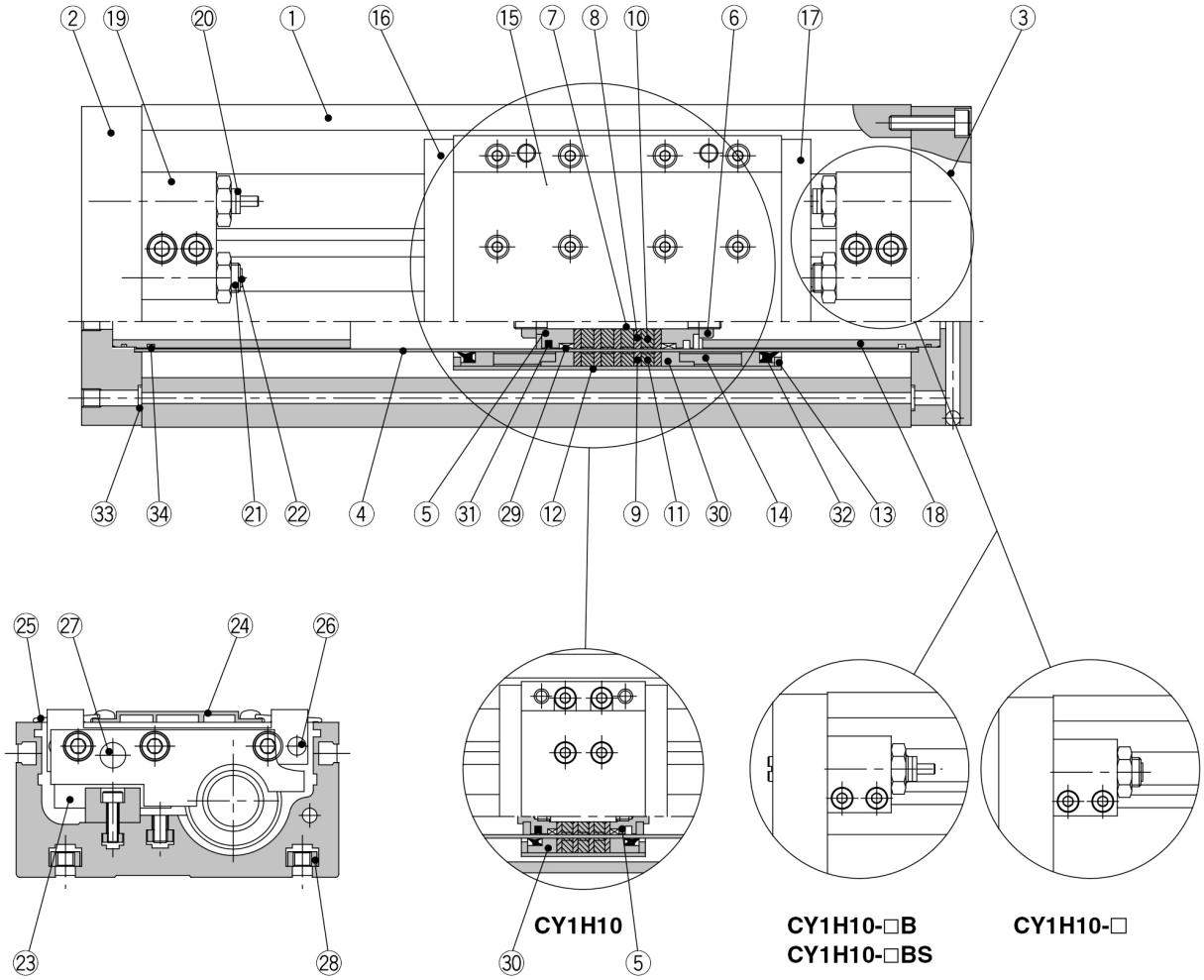

Component Parts

No.	Description	Material	Note
①	Body	Aluminum alloy	Hard anodized
②	Plate A	Aluminum alloy	Hard anodized
③	Plate B	Aluminum alloy	Hard anodized
④	Cylinder tube	Stainless steel	
⑤	Piston	Brass	Electroless nickel plated(CY1H10, 15)
		Aluminum alloy	Chromated (CY1H20, 25)
⑥	Piston nut	Carbon steel	Zinc chromated (except CY1H10, 15)
⑦	Shaft	Stainless steel	
⑧	Piston side yoke	Rolled steel plate	Zinc chromated {( ) for CY1H10}
⑨	External slider side yoke	Rolled steel plate	Zinc chromated {( ) for CY1H10}
⑩	Magnet A	Rare earth magnet	( ) for CY1H10
⑪	Magnet B	Rare earth magnet	( ) for CY1H10
⑫	External slider tube	Aluminum alloy	
⑬	Spacer	Rolled steel plate	Nickel plated
⑭	Space ring	Aluminum alloy	Chromated (except CY1H10)
⑮	Slide table	Aluminum alloy	Hard anodized
⑯	Side plate A	Aluminum alloy	Hard anodized
⑰	Side plate B	Aluminum alloy	Hard anodized

No.	Description	Material	Note
⑱	Internal stopper	Aluminum alloy	Anodized
⑲	Stopper	Aluminum alloy	Anodized
⑳	Shock absorber	—	Series RB
㉑	Adjustment bolt	Chrome molybdenum steel	Nickel plated
㉒	Adjustment bumper	Urethane rubber	
㉓	Linear guide	—	
㉔	Top cover	Aluminum alloy	Hard anodized
㉕	Dust cover	Special resin	
㉖	Magnet (for auto switch)	Rare earth magnet	
㉗	Parallel pin	Carbon steel	Nickel plated
㉘	Square nut for body mounting	Carbon steel	Nickel plated
㉙*	Wear ring A	Special resin	
㉚*	Wear ring B	Special resin	( ) for CY1H10
㉛*	Piston seal	NBR	
㉜*	Scraper	NBR	
㉝*	O ring	NBR	
㉞*	O ring	NBR	

Specifications are subject to change without prior notice and any obligation on the part of the manufacturer.

SMC CORPORATION Zuazobidea 14, 01012, Vitoria-Gasteiz, Álava +34 945184100 +34 945184126 www.smc.eu support.marketingeurope@smc.com

Additional information

Catalogue CY1_EU.pdf

Specifications are subject to change without prior notice and any obligation on the part of the manufacturer.

SMC CORPORATION Zuazobidea 14, 01012, Vitoria-Gasteiz, Álava +34 945184100 +34 945184126 www.smc.eu support.marketingeurope@smc.com