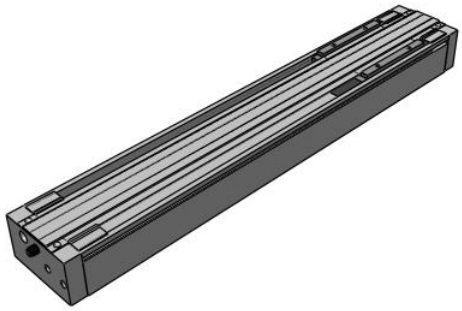

# CY1H, Magnetically Coupled Rodless Cylinder, High Precision Guide

## CY1H25-400

Datasheet

## General series information

- High precision guide
- Bore sizes: 6, 10, 15, 20, 25, & 32(mm)
- Strokes from 100mm through 1000mm
- Available with shock absorbers
- Auto-switch capable

*Magnetically coupled rodless cylinder*

## Standard specifications

| | |
|---|---|
| Guide Suffix | 1 Axis |
| Bore Size | 25 mm |
| Stroke | 400 mm |
| Adjuster | Adjuster Bolt |
| Auto Switch | No Switch |
| Lead Wire or Pre-wired Connector | 0.5 m (Or None in the Case of No Switch) |
| Number | 2 pcs. (Or None in Case of No Switch) |
| Maximum operating pressure | 0.7 MPa |
| Minimum operating pressure | 0.2 MPa |
| Proof pressure | 1.05 MPa |
| Type of cushioning | Urethane bumpers on both sides (standard), Shock absorber (option) |
| Lubrication | Non-lube |
| Fluid | Air |
| Ambient and fluid temperature | -10 - 60 °C |
| Stroke length tolerance | 0 to 1.8 mm |
| F452 - Magnetic Holding Force | 363 N |
| Piston speed | 70 - 1000 mm/s |

*Specifications are subject to change without prior notice and any obligation on the part of the manufacturer.*



**SMC CORPORATION** Zuazobidea 14, 01012, Vitoria-Gasteiz, Álava +34 945184100 +34 945184126 www.smc.eu support.marketingeurope@smc.com

| | |
|---|---|
| Action | Double Acting |
| Piping | Centralized |
| Piping port size | Rc (PT) 1/8 |
| Weight | 6.658 Kg |

Specifications are subject to change without prior notice and any obligation on the part of the manufacturer.



SMC CORPORATION Zuazobidea 14, 01012, Vitoria-Gasteiz, Álava +34 945184100 +34 945184126 www.smc.eu support.marketingeurope@smc.com

# Dimensions

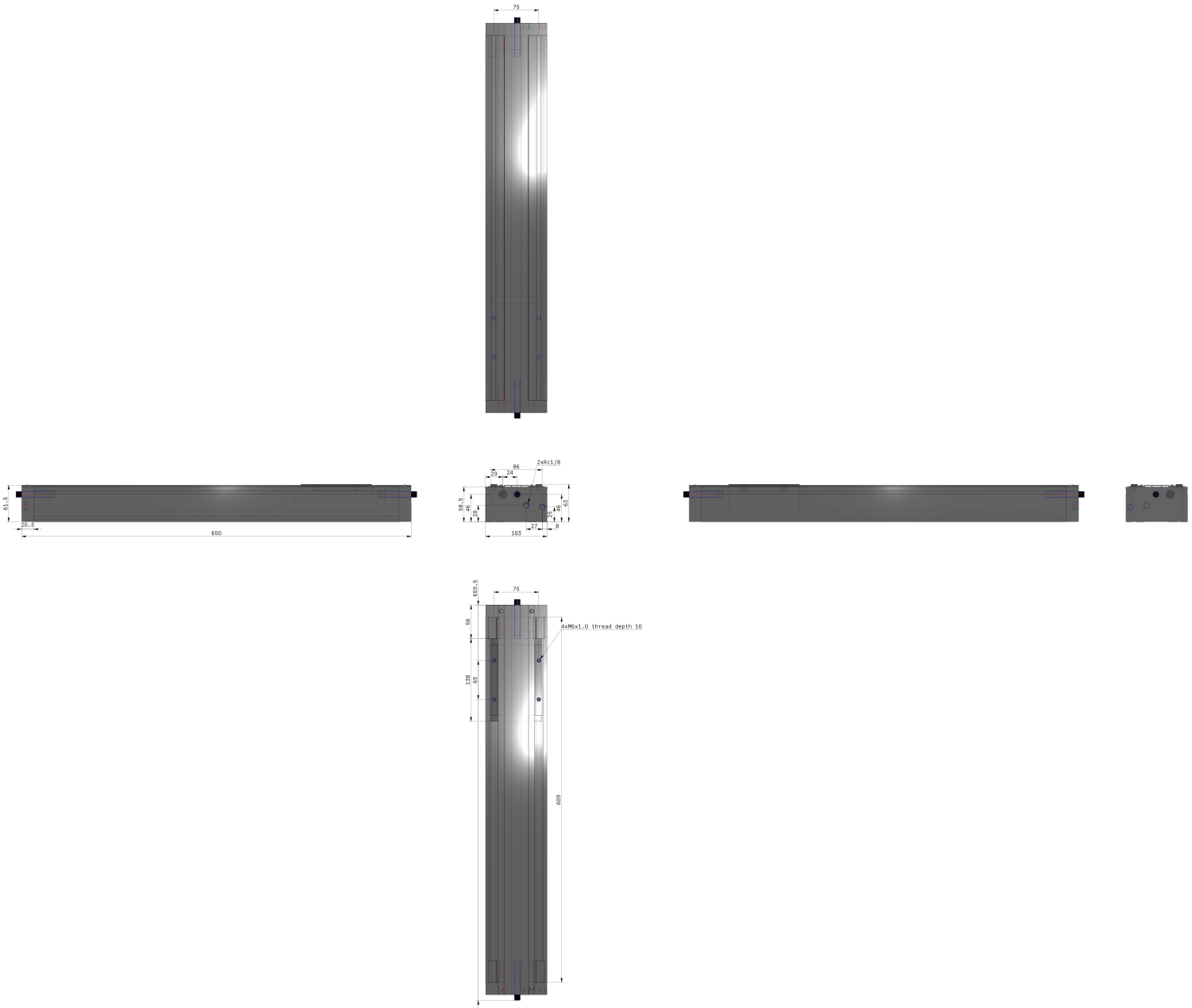


Specifications are subject to change without prior notice and any obligation on the part of the manufacturer.



SMC CORPORATION Zuazobidea 14, 01012, Vitoria-Gasteiz, Álava +34 945184100 +34 945184126 www.smc.eu support.marketingeurope@smc.com

# Constructions

## Single axis/CY1H

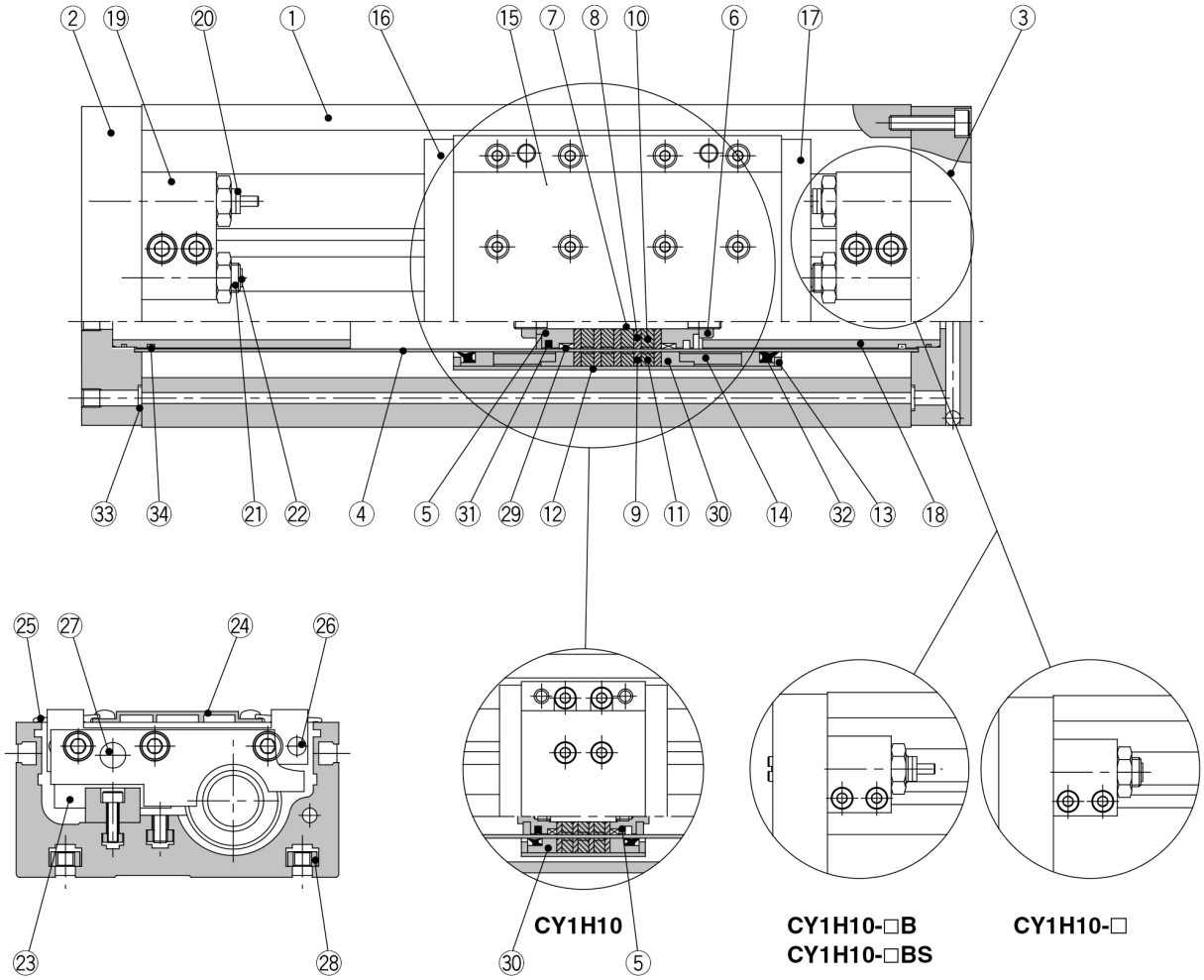


### Component Parts

| No. | Description | Material | Note |
|---|---|---|---|
| ① | Body | Aluminum alloy | Hard anodized |
| ② | Plate A | Aluminum alloy | Hard anodized |
| ③ | Plate B | Aluminum alloy | Hard anodized |
| ④ | Cylinder tube | Stainless steel | |
| ⑤ | Piston | Brass | Electroless nickel plated(CY1H10, 15) |
| | | Aluminum alloy | Chromated (CY1H20, 25) |
| ⑥ | Piston nut | Carbon steel | Zinc chromated (except CY1H10, 15) |
| ⑦ | Shaft | Stainless steel | |
| ⑧ | Piston side yoke | Rolled steel plate | Zinc chromated {( ) for CY1H10} |
| ⑨ | External slider side yoke | Rolled steel plate | Zinc chromated {( ) for CY1H10} |
| ⑩ | Magnet A | Rare earth magnet | ( ) for CY1H10 |
| ⑪ | Magnet B | Rare earth magnet | ( ) for CY1H10 |
| ⑫ | External slider tube | Aluminum alloy | |
| ⑬ | Spacer | Rolled steel plate | Nickel plated |
| ⑭ | Space ring | Aluminum alloy | Chromated (except CY1H10) |
| ⑮ | Slide table | Aluminum alloy | Hard anodized |
| ⑯ | Side plate A | Aluminum alloy | Hard anodized |
| ⑰ | Side plate B | Aluminum alloy | Hard anodized |

| No. | Description | Material | Note |
|---|---|---|---|
| ⑱ | Internal stopper | Aluminum alloy | Anodized |
| ⑲ | Stopper | Aluminum alloy | Anodized |
| ⑳ | Shock absorber | — | Series RB |
| ㉑ | Adjustment bolt | Chrome molybdenum steel | Nickel plated |
| ㉒ | Adjustment bumper | Urethane rubber | |
| ㉓ | Linear guide | — | |
| ㉔ | Top cover | Aluminum alloy | Hard anodized |
| ㉕ | Dust cover | Special resin | |
| ㉖ | Magnet (for auto switch) | Rare earth magnet | |
| ㉗ | Parallel pin | Carbon steel | Nickel plated |
| ㉘ | Square nut for body mounting | Carbon steel | Nickel plated |
| ㉙* | Wear ring A | Special resin | |
| ㉚* | Wear ring B | Special resin | ( ) for CY1H10 |
| ㉛* | Piston seal | NBR | |
| ㉜* | Scraper | NBR | |
| ㉝* | O ring | NBR | |
| ㉞* | O ring | NBR | |

Specifications are subject to change without prior notice and any obligation on the part of the manufacturer.



SMC CORPORATION Zuazobidea 14, 01012, Vitoria-Gasteiz, Álava +34 945184100 +34 945184126 www.smc.eu support.marketingeurope@smc.com

## Additional information

Catalogue CY1_EU.pdf

Specifications are subject to change without prior notice and any obligation on the part of the manufacturer.



SMC CORPORATION Zuazobidea 14, 01012, Vitoria-Gasteiz, Álava +34 945184100 +34 945184126 www.smc.eu support.marketingeurope@smc.com