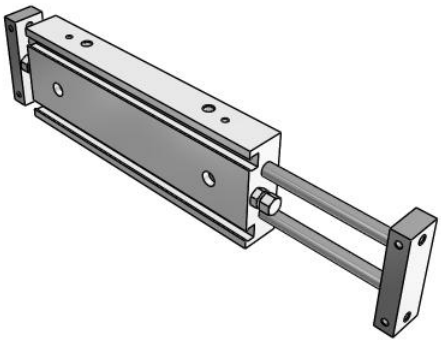

CXSWM, Dual Rod Cylinder, Double Rod, Slide Bearing

CXSWM10-50

Datasheet

General series information

- Dual rod cylinder: double rod
- Bore sizes: 6, 10, 15, 20, 25, 32 (mm)
- Strokes from 10mm through 100mm depending upon bore size
- Variety of switches and a variety of lead wire lengths

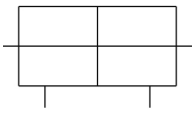

Double-acting cylinder with double piston rod

Standard specifications

Bore Size	10 mm
Thread	ø6-ø20 Bore: M Thread; ø25,ø32 Bore: Rc 1/8
Stroke	50 mm
Auto Switch	No Switch
Number	2 pcs. [Or None in the Case of No Switch]
Pressure medium	Air (non-lube)
Maximum operating pressure	0.7 MPa
Minimum operating pressure	0.15 MPa
Proof pressure	1.05 MPa
Maximum ambient temperature	60 ºC
Minimum ambient temperature	-10 ºC
Number of pneumatic connections	2 pcs.
Mode of operation of drive	Double acting
Type of cushioning	Bumper is standard on both sides
Type of stroke reduction	Both sides
Port size	M5
Piston speed	50 - 500 mm/s
Stroke adjustable range	0 to –10mm compared to the standard stroke (Extended end: 5mm; Retracted end: 5mm)

Specifications are subject to change without prior notice and any obligation on the part of the manufacturer.

SMC CORPORATION Zuazobidea 14, 01012, Vitoria-Gasteiz, Álava +34 945184100 +34 945184126 www.smc.eu support.marketingeurope@smc.com

Weight	0.390 Kg

Specifications are subject to change without prior notice and any obligation on the part of the manufacturer.

SMC CORPORATION Zuazobidea 14, 01012, Vitoria-Gasteiz, Álava +34 945184100 +34 945184126 www.smc.eu support.marketingeurope@smc.com

Dimensions

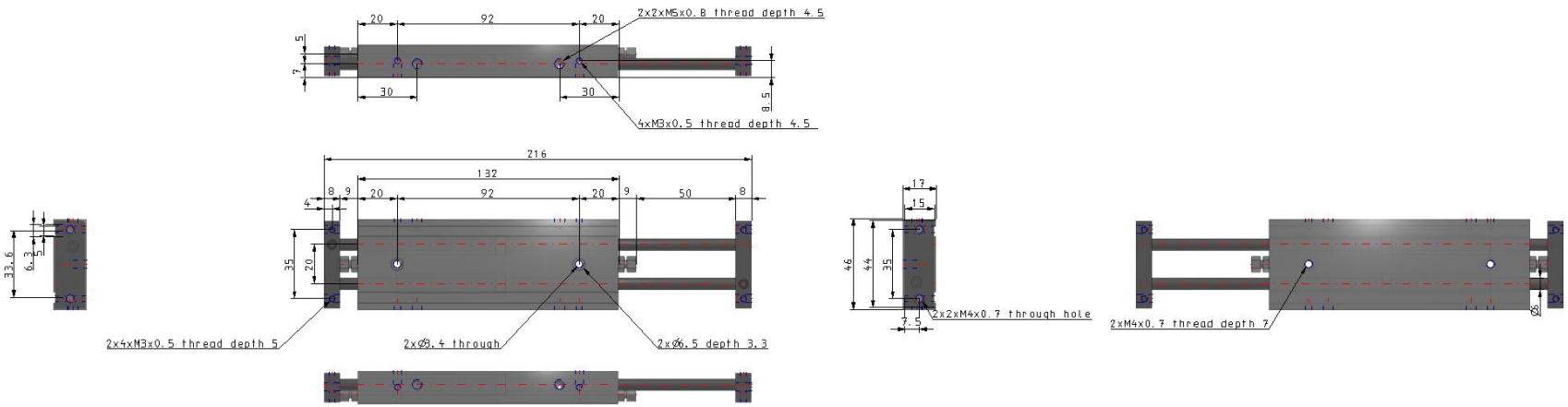

Specifications are subject to change without prior notice and any obligation on the part of the manufacturer.

SMC CORPORATION Zuazobidea 14, 01012, Vitoria-Gasteiz, Álava +34 945184100 +34 945184126 www.smc.eu support.marketingeurope@smc.com

Constructions

CXSWM Slide bearing

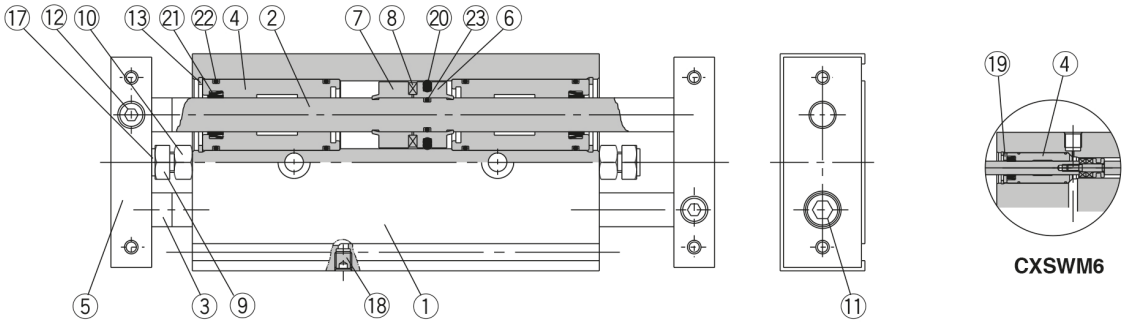

Parts list

No.	Description	Material	Note
1	**Housing**	Aluminum alloy	Hard anodized
2	**Piston rod A**	Carbon steel	Hard chrome plated
3	**Piston rod B**	Carbon steel	Hard chrome plated
4	**Rod cover/Bearing**	Aluminum alloy	
5	**Plate**	Aluminum alloy	Hard anodized
6	**Piston A**	Aluminum alloy	Chromated
7	**Piston B**	Aluminum alloy	Chromated
8	**Magnet**	Magnetic material	
9	**Bumper bolt**	Carbon steel	Nickel plated
10	**Hexagon nut**	Carbon steel	Nickel plated
11	**Hexagon socket head cap screw**	Chromium steel	Nickel plated
12	**Hexagon socket head set screw**	Chromium steel	Nickel plated

Note) Piston rod for CXSWL is quenched.

Parts list

No.	Description	Material	Note
13	**Snap ring**	Special steel	Nickel plated
14	**Bumper holder**	Synthetic resin	
15	**Ball bushing**	—	
16	**Bearing spacer**	Synthetic resin	
17	**Bumper**	Polyurethane	
18	**Plug**	Chromium steel	Nickel plated
19	**Seal retainer**	Aluminum alloy	
20*	**Piston seal**	NBR	
21*	**Rod seal**	NBR	
22*	**O-ring**	NBR	
23	**O-ring**	NBR	

* Seal kits consist of items 20 through 22, and can be ordered by using the seal kit number corresponding to each bore size. However for CXSWL15, there are two types of O-ring (22). For other sizes, one type of O-ring is available.
For CXSWL6, aluminum alloy is used for 16.

Specifications are subject to change without prior notice and any obligation on the part of the manufacturer.

SMC CORPORATION Zuazobidea 14, 01012, Vitoria-Gasteiz, Álava +34 945184100 +34 945184126 www.smc.eu support.marketingeurope@smc.com

Additional information

Catalogue CXS_EU.pdf

Specifications are subject to change without prior notice and any obligation on the part of the manufacturer.

SMC CORPORATION Zuazobidea 14, 01012, Vitoria-Gasteiz, Álava +34 945184100 +34 945184126 www.smc.eu support.marketingeurope@smc.com