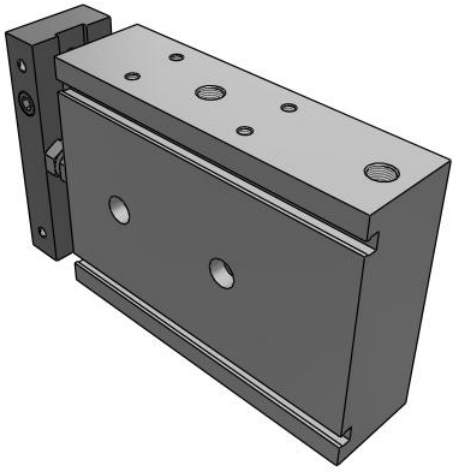

CXSM, Dual Piston Rods, Slide Bearing

CXSM32TF-50

Datasheet

General series information

- Dual rod cylinder with slide bearing
- Bore sizes: 6, 10, 15, 20, 25, 32 (mm)
- Strokes from 10mm through 100mm depending upon bore size
- Variety of switches and a variety of lead wire lengths

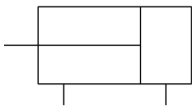

Double-acting, single-rod cylinder

Standard specifications

Bore Size	32 mm
Thread	TF (Ø25, Ø32 Bore: G 1/8)
Lube-retainer	Without Stable Lubrication Function
Stroke	50 mm
Auto Switch	No Switch
Lead Wire or Pre-wired Connector	0.5 m (Or None in the Case of No Switch)
Number	2 pcs. (Or None in the Case of No Switch)
Pressure medium	Air (non-lube)
Maximum operating pressure	0.7 MPa
Minimum operating pressure	0.05 MPa
Proof pressure	1.05 MPa
Maximum ambient temperature	60 ºC
Minimum ambient temperature	-10 ºC
Type of cushioning	Rubber Bumper
Port size	0.125
Piston speed	30 - 600 mm/s
Stroke adjustable range	0 to –5mm compared to the standard stroke
Weight	1.577 Kg

Specifications are subject to change without prior notice and any obligation on the part of the manufacturer.

SMC CORPORATION Zuazobidea 14, 01012, Vitoria-Gasteiz, Álava +34 945184100 +34 945184126 www.smc.eu support.marketingeurope@smc.com

Dimensions

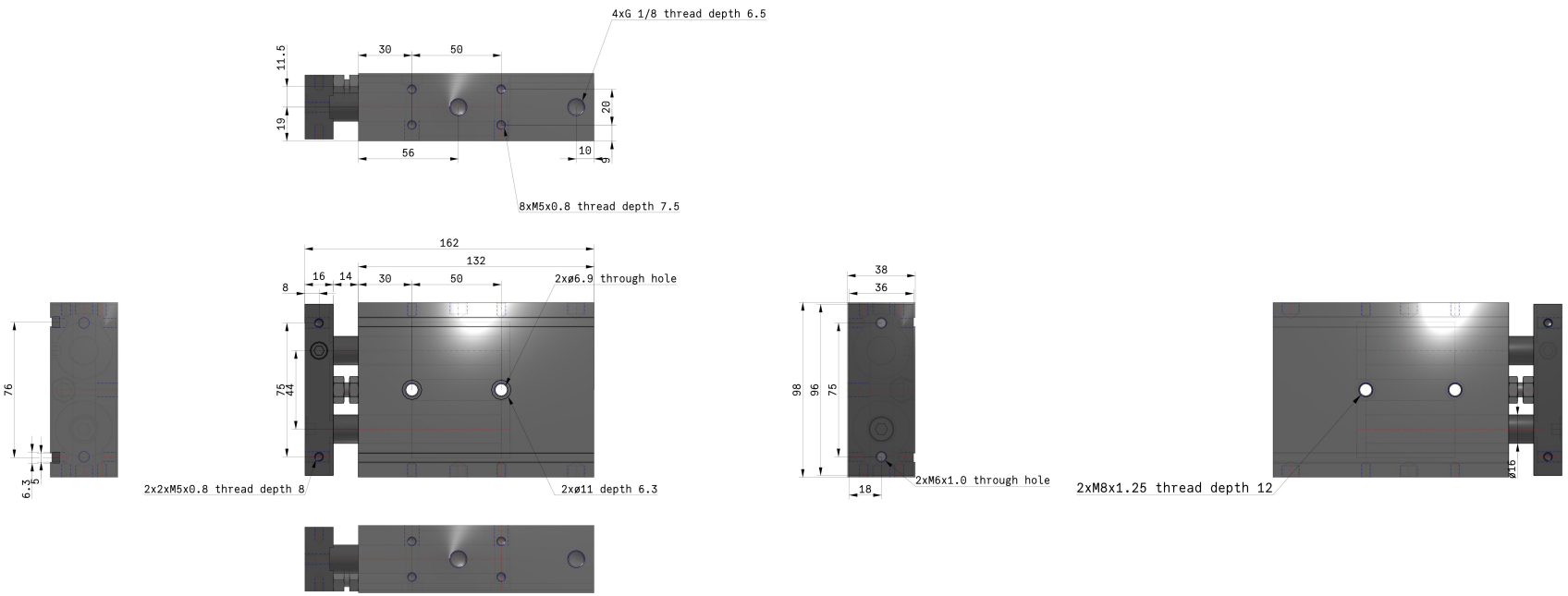

Specifications are subject to change without prior notice and any obligation on the part of the manufacturer.

SMC CORPORATION Zuazobidea 14, 01012, Vitoria-Gasteiz, Álava +34 945184100 +34 945184126 www.smc.eu support.marketingeurope@smc.com

Constructions

CXSM20 to 32

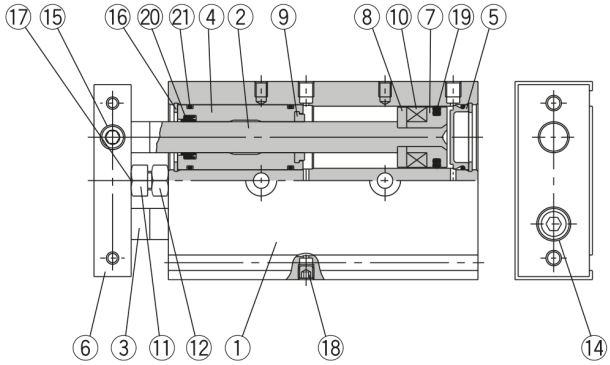

Parts list

No.	Description	Material	Note
1	**Housing**	Aluminum alloy	Hard anodized
2	**Piston rod A**	Carbon steel Note 1)	Hard chrome plated
3	**Piston rod B**	Carbon steel Note 1)	Hard chrome plated
4	**Rod cover/Bearing**	Aluminum alloy	
5	**Head cover**	Special steel Note 2)	
6	**Plate**	Aluminum alloy	Hard anodized
7	**Piston A**	Aluminum alloy	Chromated
8	**Piston B**	Aluminum alloy	Chromated
9	**Bumper A**	Polyurethane	
10	**Magnet**	Magnetic material	
11	**Bumper bolt**	Carbon steel	Nickel plated
12	**Hexagon nut**	Carbon steel	Nickel plated
13	**Bumper B**	Polyurethane	
14	**Hexagon socket head cap screw**	Chromium steel	Nickel plated
15	**Hexagon socket head set screw**	Chromium steel	Nickel plated
16	**Snap ring**	Special steel	Nickel plated

Note 1) Stainless steel for CXSM6.
Note 2) Anodized aluminum alloy for CXSM6.

Parts list

No.	Description	Material	Note
17	**Bumper**	Polyurethane	
18	**Plug**	Chromium steel	Nickel plated
19	**Piston seal**	NBR	
20	**Rod seal**	NBR	
21	**O-ring**	NBR	
22	**Head cover B**	Aluminum alloy	Nickel plated
23	**Seal retainer**	Aluminum alloy	
24	**Port spacer**	Aluminum alloy	
25	**Steel ball**	Special steel	Hard chrome plated
26	**Snap ring B**	Special steel	Nickel plated

Specifications are subject to change without prior notice and any obligation on the part of the manufacturer.

SMC CORPORATION Zuazobidea 14, 01012, Vitoria-Gasteiz, Álava +34 945184100 +34 945184126 www.smc.eu support.marketingeurope@smc.com

Additional information

Catalogue CXS_EU.pdf

Specifications are subject to change without prior notice and any obligation on the part of the manufacturer.

SMC CORPORATION Zuazobidea 14, 01012, Vitoria-Gasteiz, Álava +34 945184100 +34 945184126 www.smc.eu support.marketingeurope@smc.com