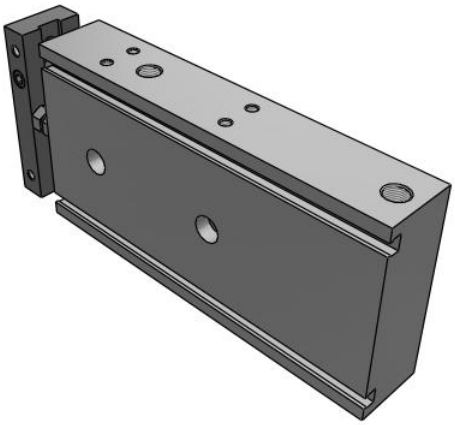

CXSM, Dual Piston Rods, Slide Bearing
CXSM25TF-90

Datasheet

General series information

- Dual rod cylinder with slide bearing
- Bore sizes: 6, 10, 15, 20, 25, 32 (mm)
- Strokes from 10mm through 100mm depending upon bore size
- Variety of switches and a variety of lead wire lengths

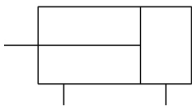

Double-acting, single-rod cylinder

Standard specifications

Bore Size	25 mm
Thread	TF (Ø25, Ø32 Bore: G 1/8)
Lube-retainer	Without Stable Lubrication Function
Stroke	90 mm
Auto Switch	No Switch
Lead Wire or Pre-wired Connector	0.5 m (Or None in the Case of No Switch)
Number	2 pcs. (Or None in the Case of No Switch)
Pressure medium	Air (non-lube)
Maximum operating pressure	0.7 MPa
Minimum operating pressure	0.05 MPa
Proof pressure	1.05 MPa
Maximum ambient temperature	60 ºC
Minimum ambient temperature	-10 ºC
Type of cushioning	Rubber Bumper
Port size	0.125
Piston speed	30 - 600 mm/s
Stroke adjustable range	0 to –5mm compared to the standard stroke

Specifications are subject to change without prior notice and any obligation on the part of the manufacturer.

SMC CORPORATION Zuazobidea 14, 01012, Vitoria-Gasteiz, Álava +34 945184100 +34 945184126 www.smc.eu support.marketingeurope@smc.com

Dimensions

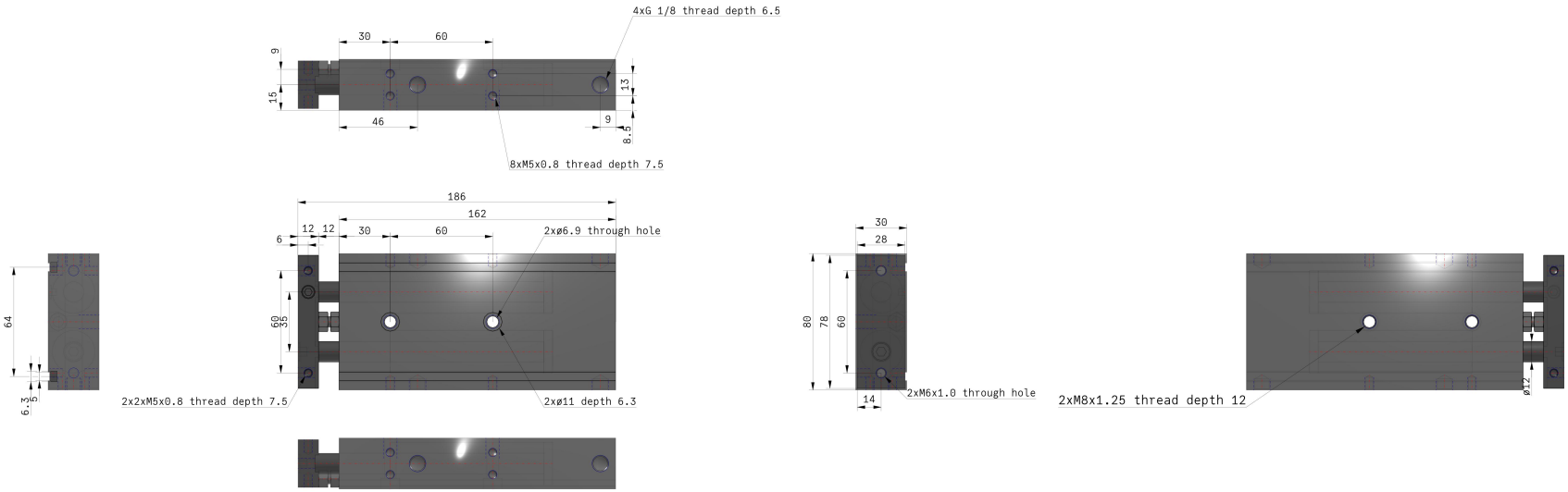

Specifications are subject to change without prior notice and any obligation on the part of the manufacturer.

SMC CORPORATION Zuazobidea 14, 01012, Vitoria-Gasteiz, Álava +34 945184100 +34 945184126 www.smc.eu support.marketingeurope@smc.com

Constructions

CXSM20 to 32

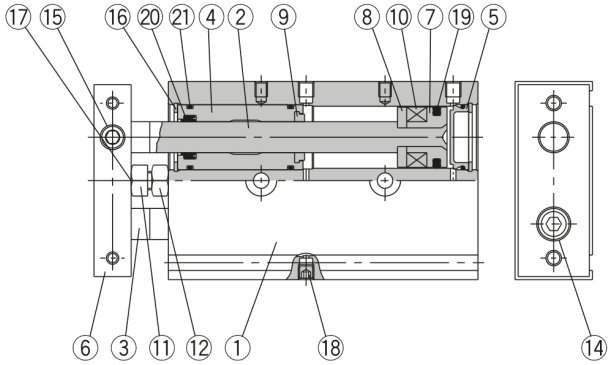

Parts list

No.	Description	Material	Note
1	**Housing**	Aluminum alloy	Hard anodized
2	**Piston rod A**	Carbon steel Note 1)	Hard chrome plated
3	**Piston rod B**	Carbon steel Note 1)	Hard chrome plated
4	**Rod cover/Bearing**	Aluminum alloy	
5	**Head cover**	Special steel Note 2)	
6	**Plate**	Aluminum alloy	Hard anodized
7	**Piston A**	Aluminum alloy	Chromated
8	**Piston B**	Aluminum alloy	Chromated
9	**Bumper A**	Polyurethane	
10	**Magnet**	Magnetic material	
11	**Bumper bolt**	Carbon steel	Nickel plated
12	**Hexagon nut**	Carbon steel	Nickel plated
13	**Bumper B**	Polyurethane	
14	**Hexagon socket head cap screw**	Chromium steel	Nickel plated
15	**Hexagon socket head set screw**	Chromium steel	Nickel plated
16	**Snap ring**	Special steel	Nickel plated

Note 1) Stainless steel for CXSM6.
Note 2) Anodized aluminum alloy for CXSM6.

Parts list

No.	Description	Material	Note
17	**Bumper**	Polyurethane	
18	**Plug**	Chromium steel	Nickel plated
19	**Piston seal**	NBR	
20	**Rod seal**	NBR	
21	**O-ring**	NBR	
22	**Head cover B**	Aluminum alloy	Nickel plated
23	**Seal retainer**	Aluminum alloy	
24	**Port spacer**	Aluminum alloy	
25	**Steel ball**	Special steel	Hard chrome plated
26	**Snap ring B**	Special steel	Nickel plated

Specifications are subject to change without prior notice and any obligation on the part of the manufacturer.

SMC CORPORATION Zuazobidea 14, 01012, Vitoria-Gasteiz, Álava +34 945184100 +34 945184126 www.smc.eu support.marketingeurope@smc.com

Additional information

Catalogue CXS_EU.pdf

Specifications are subject to change without prior notice and any obligation on the part of the manufacturer.

SMC CORPORATION Zuazobidea 14, 01012, Vitoria-Gasteiz, Álava +34 945184100 +34 945184126 www.smc.eu support.marketingeurope@smc.com