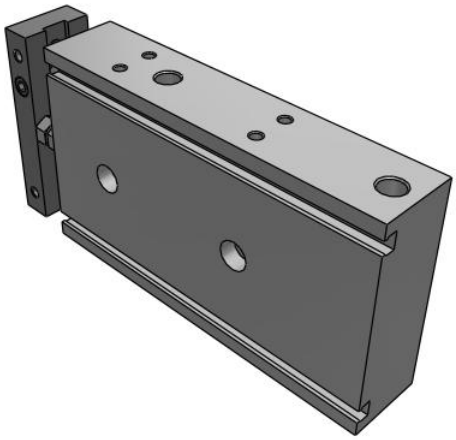

CXSL, Dual Piston Rods, Ball Bushing Bearing
CXSL25TF-70

Datasheet

General series information

- Dual rod cylinder with ball bearing slide
- Bore sizes: 6, 10, 15, 20, 25, 32 (mm)
- Strokes from 10mm through 100mm depending upon bore size
- Variety of switches and a variety of lead wire lengths

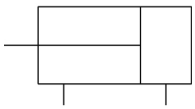

Double-acting, single-rod cylinder

Standard specifications

Bore Size	25 mm
Thread	TF (Ø25, Ø32 Bore: G 1/8)
Lube-retainer	Without Stable Lubrication Function
Stroke	70 mm
Auto Switch	No Switch
Lead Wire or Pre-wired Connector	0.5 m (Or None in the Case of No Switch)
Number	2 pcs. (Or None in the Case of No Switch)
Pressure medium	Air (non-lube)
Maximum operating pressure	0.7 MPa
Minimum operating pressure	0.05 MPa
Proof pressure	1.05 MPa
Maximum ambient temperature	60 ºC
Minimum ambient temperature	-10 ºC
Number of pneumatic connections	2 pcs.
Mode of operation of drive	Double acting
Type of cushioning	Rubber Bumper
Port size	0.125
Piston speed	30 - 600 mm/s
Stroke adjustable range	0 to – 5 mm compared to the standard stroke

Specifications are subject to change without prior notice and any obligation on the part of the manufacturer.

SMC CORPORATION Zuazobidea 14, 01012, Vitoria-Gasteiz, Álava +34 945184100 +34 945184126 www.smc.eu support.marketingeurope@smc.com

Weight	0.955 Kg

Specifications are subject to change without prior notice and any obligation on the part of the manufacturer.

SMC CORPORATION Zuazobidea 14, 01012, Vitoria-Gasteiz, Álava +34 945184100 +34 945184126 www.smc.eu support.marketingeurope@smc.com

Dimensions

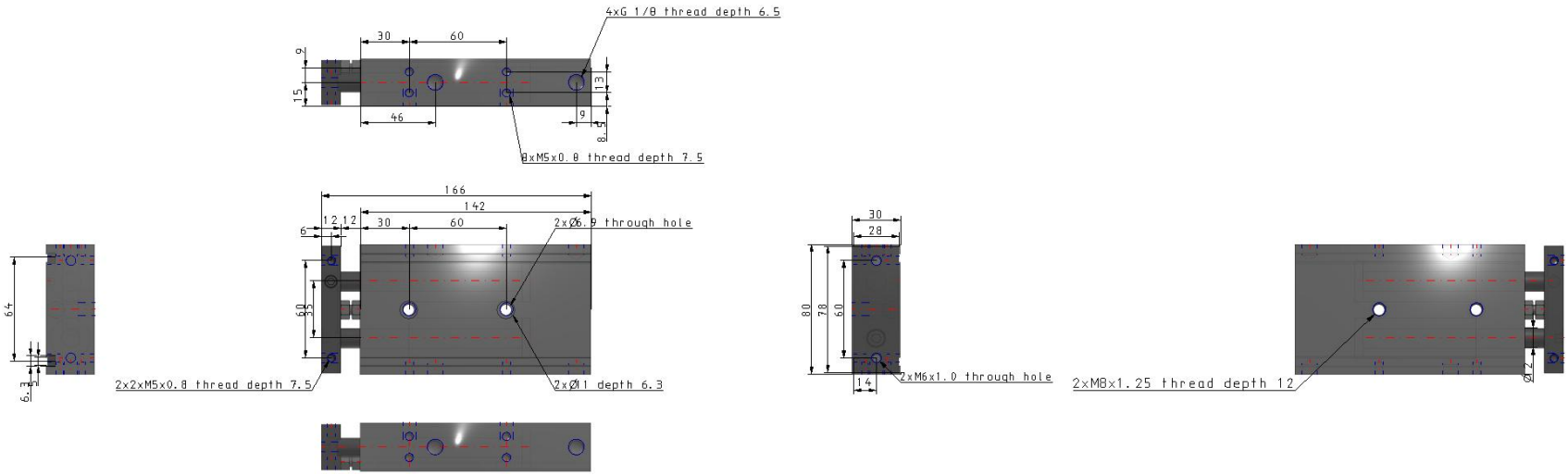

Specifications are subject to change without prior notice and any obligation on the part of the manufacturer.

SMC CORPORATION Zuazobidea 14, 01012, Vitoria-Gasteiz, Álava +34 945184100 +34 945184126 www.smc.eu support.marketingeurope@smc.com

Constructions

CXSL20 to 32

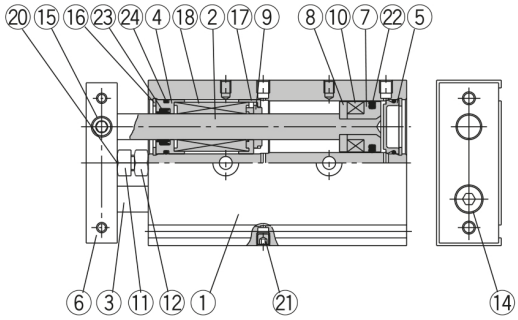

Parts list: Standard piping

No.	Description	Material	Note
1	**Housing**	Aluminum alloy	Hard anodized
2	**Piston rod A**	Special steel	Hard chrome plated
3	**Piston rod B**	Special steel	Hard chrome plated
4	**Rod cover/Bearing**	Aluminum alloy	
5	**Head cover**	Special steel Note 1)	
6	**Plate**	Aluminum alloy	Hard anodized
7	**Piston A**	Aluminum alloy	Chromated
8	**Piston B**	Aluminum alloy	Chromated
9	**Bumper A**	Polyurethane	
10	**Magnet**	Magnetic material	
11	**Bumper bolt**	Carbon steel	Nickel plated
12	**Hexagon nut**	Carbon steel	Nickel plated
13	**Bumper B**	Polyurethane	
14	**Hexagon socket head cap screw**	Chromium steel	Nickel plated
15	**Hexagon socket head set screw**	Chromium steel	Nickel plated
16	**Snap ring**	Special steel	Nickel plated
17	**Bumper holder**	Synthetic resin	

Note 1) Anodized aluminum alloy for CXSL6.

Parts list

No.	Description	Material	Note
18	**Ball bushing**	—	
19	**Bearing spacer**	Synthetic resin Note 2)	
20	**Bumper**	Polyurethane	
21	**Plug**	Chromium steel	Nickel plated
22	**Piston seal**	NBR	
23	**Rod seal**	NBR	
24	**O-ring**	NBR	
25	**Head cover B**	Aluminum alloy	Nickel plated
26	**Seal retainer**	Aluminum alloy	
27	**Port spacer**	Aluminum alloy	
28	**Steel ball**	Special steel	Hard chrome plated
29	**Snap ring B**	Special steel	Nickel plated

Note 2) Aluminum alloy for CXSL6.

Specifications are subject to change without prior notice and any obligation on the part of the manufacturer.

SMC CORPORATION Zuazobidea 14, 01012, Vitoria-Gasteiz, Álava +34 945184100 +34 945184126 www.smc.eu support.marketingeurope@smc.com

Additional information

Catalogue CXS_EU.pdf

Specifications are subject to change without prior notice and any obligation on the part of the manufacturer.

SMC CORPORATION Zuazobidea 14, 01012, Vitoria-Gasteiz, Álava +34 945184100 +34 945184126 www.smc.eu support.marketingeurope@smc.com