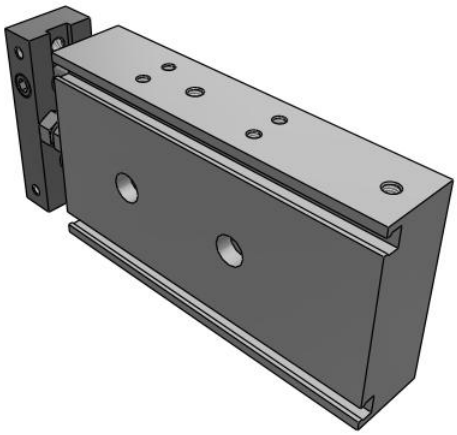

# CXSL, Dual Piston Rods, Ball Bushing Bearing
## CXSL20-45

Datasheet

## General series information

- Dual rod cylinder with ball bearing slide
- Bore sizes: 6, 10, 15, 20, 25, 32 (mm)
- Strokes from 10mm through 100mm depending upon bore size
- Variety of switches and a variety of lead wire lengths

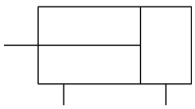

*Double-acting, single-rod cylinder*

## Standard specifications

| | |
|---|---|
| Bore Size | 20 mm |
| Thread | ø6-ø20 Bore: M Thread; ø25,ø32 Bore: Rc 1/8 |
| Lube-retainer | Without Stable Lubrication Function |
| Stroke | 45 mm |
| Auto Switch | No Switch |
| Lead Wire or Prewired Connector | 0.5m [Or None in the Case of No Switch] |
| Number | 2 pcs. [Or None in the Case of No Switch] |
| Pressure medium | Air (non-lube) |
| Maximum operating pressure | 0.7 MPa |
| Minimum operating pressure | 0.05 MPa |
| Proof pressure | 1.05 MPa |
| Maximum ambient temperature | 60 ºC |
| Minimum ambient temperature | -10 ºC |
| Number of pneumatic connections | 2 pcs. |
| Mode of operation of drive | Double acting |
| Type of cushioning | Rubber Bumper |
| Port size | M5 |
| Piston speed | 30 - 700 mm/s |
| Stroke adjustable range | 0 to – 5 mm compared to the standard stroke |

*Specifications are subject to change without prior notice and any obligation on the part of the manufacturer.*



**SMC CORPORATION** Zuazobidea 14, 01012, Vitoria-Gasteiz, Álava +34 945184100 +34 945184126 www.smc.eu support.marketingeurope@smc.com

| | |
|---|---|
| Weight | 0.550 Kg |

Specifications are subject to change without prior notice and any obligation on the part of the manufacturer.



SMC CORPORATION Zuazobidea 14, 01012, Vitoria-Gasteiz, Álava +34 945184100 +34 945184126 www.smc.eu support.marketingeurope@smc.com

# Dimensions

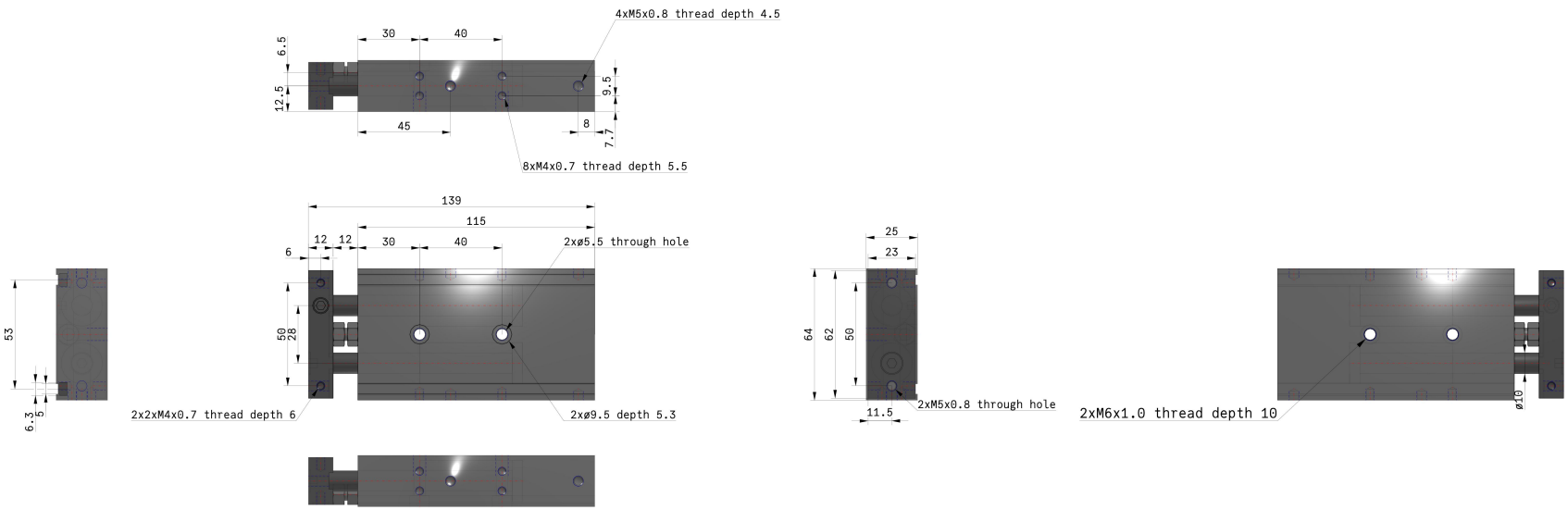


Specifications are subject to change without prior notice and any obligation on the part of the manufacturer.



SMC CORPORATION Zuazobidea 14, 01012, Vitoria-Gasteiz, Álava +34 945184100 +34 945184126 www.smc.eu support.marketingeurope@smc.com

# Constructions

### CXSL20 to 32

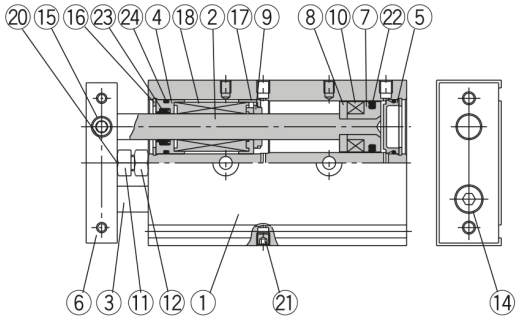


### Parts list: Standard piping

| No. | Description | Material | Note |
|---|---|---|---|
| 1 | **Housing** | Aluminum alloy | Hard anodized |
| 2 | **Piston rod A** | Special steel | Hard chrome plated |
| 3 | **Piston rod B** | Special steel | Hard chrome plated |
| 4 | **Rod cover/Bearing** | Aluminum alloy | |
| 5 | **Head cover** | Special steel Note 1) | |
| 6 | **Plate** | Aluminum alloy | Hard anodized |
| 7 | **Piston A** | Aluminum alloy | Chromated |
| 8 | **Piston B** | Aluminum alloy | Chromated |
| 9 | **Bumper A** | Polyurethane | |
| 10 | **Magnet** | Magnetic material | |
| 11 | **Bumper bolt** | Carbon steel | Nickel plated |
| 12 | **Hexagon nut** | Carbon steel | Nickel plated |
| 13 | **Bumper B** | Polyurethane | |
| 14 | **Hexagon socket head cap screw** | Chromium steel | Nickel plated |
| 15 | **Hexagon socket head set screw** | Chromium steel | Nickel plated |
| 16 | **Snap ring** | Special steel | Nickel plated |
| 17 | **Bumper holder** | Synthetic resin | |

Note 1) Anodized aluminum alloy for CXSL6.

### Parts list

| No. | Description | Material | Note |
|---|---|---|---|
| 18 | **Ball bushing** | — | |
| 19 | **Bearing spacer** | Synthetic resin Note 2) | |
| 20 | **Bumper** | Polyurethane | |
| 21 | **Plug** | Chromium steel | Nickel plated |
| 22 | **Piston seal** | NBR | |
| 23 | **Rod seal** | NBR | |
| 24 | **O-ring** | NBR | |
| 25 | **Head cover B** | Aluminum alloy | Nickel plated |
| 26 | **Seal retainer** | Aluminum alloy | |
| 27 | **Port spacer** | Aluminum alloy | |
| 28 | **Steel ball** | Special steel | Hard chrome plated |
| 29 | **Snap ring B** | Special steel | Nickel plated |

Note 2) Aluminum alloy for CXSL6.

*Specifications are subject to change without prior notice and any obligation on the part of the manufacturer.*



**SMC CORPORATION** Zuazobidea 14, 01012, Vitoria-Gasteiz, Álava +34 945184100 +34 945184126 www.smc.eu support.marketingeurope@smc.com

## Additional information

Catalogue CXS_EU.pdf

Specifications are subject to change without prior notice and any obligation on the part of the manufacturer.



SMC CORPORATION Zuazobidea 14, 01012, Vitoria-Gasteiz, Álava +34 945184100 +34 945184126 www.smc.eu support.marketingeurope@smc.com